sifam tinsley
PRECISION INSTRUMENTATION

DIGITAL PANEL METERS
www.sifamtinsley.co.uk

USER MANUAL

Issue 1

Multifunction Meters
Transducers & Isolators
Temperature Controllers
Converters & Recorders
Digital Panel Meters
Current Transformers
kWh Energy Meters
Analogue Panel Meters
Shunts
Digital Bargraphs
Digital Multimeters
Protection Relays
Synchroscope Series
Rotary Switches
Power Supplies
Test & Measurement

UNO NX WITH TOUCH SENSOR (1PH) PROGRAMMABLE DIGITAL PANEL METER

SUBJECT TO CHANGE WITHOUT NOTICE
This datasheet superseded all previous versions – please keep for future reference

PROGRAMMABLE DPM

AC Volt Meter (1Φ) : DPM - V
AC Ammeter (1Φ) : DPM - A

Installation & Operating Instructions

Section	Contents
1.	Introduction
2.	Measurement Reading Screens
3.	Programming
	3.1 Set Up Screens
4.	Installation
	4.1 EMC Installation Requirements
	4.2 Case Dimensions and Panel Cut-out
	4.3 Wiring
	4.4 Auxiliary Supply
	4.5 Fusing
	4.6 Earth / Ground Connections
5.	Connection Diagrams
	5.1 Connection Diagrams for DPM V
	5.2 Connection Diagrams for DPM A
6.	Specifications

DMAN-00IM-1047 Rev_B 11/2023

1. Introduction

The DPM Series is a panel mounted 96 x 96mm Digital Panel Meters for the measurement of AC Voltage and current in three phase or single phase systems. The instrument integrates accurate measurement technology. The parameters are displayed with Ultra high brightness LED display with 14mm Digit height which enables to take readings from long distance. Programmable DPM can be configured and Programmed at site for the following :

PT Primary, CT Primary, PT Secondary, CT Secondary. The front panel has two touch keys for user interface to scroll through the available setup parameters. (see section 3.1)

2. Measurement Reading Screens

Current

L-N Voltage

Current in kA

Voltage In kV

Setup Parameter Screens:

Press UP and DOWN key simultaneously to enter into setup menu The meter shows only relevant setup screens according meter model

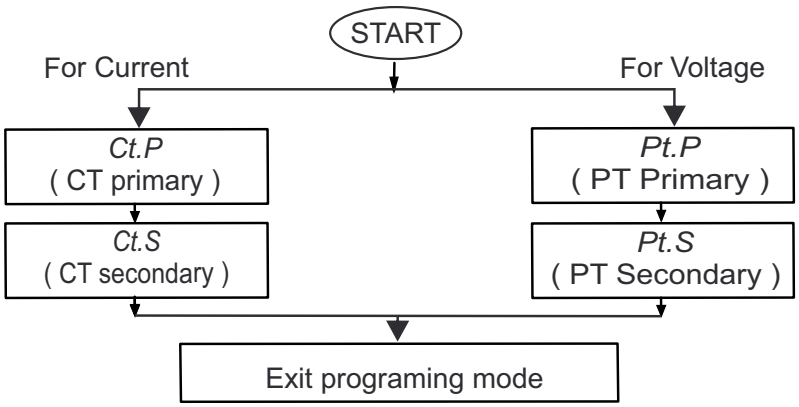

3. Programming

The following sections comprise step by step procedures for configuring the DPM for individual user requirements. To access the set-up screens touch and hold the "⇧" and "⇩" keys simultaneously. This will take the user into the Sys Type Screen Followed by "Sys" on Display(Section 3.1) .

3.1 Set Up Screens

3.1.1 Potential Transformer Primary Value for V

This screen displays "Pt.P" message followed by previously set PT primary value on display. For DPM V user can set PT primary value from **57.5V$_{LN}$ to 900kV$_{LN}$** and default value **480VLN**.

Pressing the "⇩" key accepts the present value and advances to the "PT Secondary " selection menu(See Section 3.1.3) for DPM V.

Pressing the "⇧" key will enter the "Potential transformer Primary Value Multiplier Selection".

DPM -V: Initially the "multiplier must be selected. Pressing the "⇧" Key will move the decimal point position

to the right Side and show # #.# , # # #. after which it will again shift to #.# # , # #.# , # # #. With annunciation of "x1000", which indicates the value in kV. Pressing the "⇩" key accepts the present multiplier (Decimal Point position) and advances to the "PT Primary value Edit" menu with decimal flashing to indicate cursor position.

PT Primary value Edit

Pressing the "⇧" key will scroll the value of the most significant digit. Pressing the "⇩ " key accepts the present value at the cursor position and advances the cursor to the next Less significant digit. When the least significant digit has been set, pressing the "⇩ " key will advance to the "Potential transformer Primary Value

Confirmation" screen. For **DPM V:** When PT primary is less than 57.5VLN then meter shows"Err" & again goes to PT primary edit stage with the minimum PT primary value i.e. 57.5VLN

Note : the flashing decimal point indicates the cursor position, a steady decimal point will be present to identify the scaling of the number until the cursor position coincides with the steady decimal point position. At this stage the decimal point will be flashing.

Potential Transformer Primary Value Confirmation

This screen will only appear following an edit of the Potential Transformer Primary Value If the set value is to be corrected, pressing the "⇧" key will return to the "Potential Transformer Primary Value Edit" stage. Pressing the "⇩" key sets the value and then advance to the "PT secondary screen" Selection menu.

3.1.2 Current Transformer Primary Value (for A)

This screen displays “Ct.P” message followed by previously set CT primary value on display. This screen enables user to set CT primary from **1A to 9999A** and default value **5A**.

Pressing the “⇩” key accepts the present value and advances to the “CT Secondary Selection screen” Pressing the “⇧” key will shift decimal point position to right side and show #.# # #, # #.# #, # # #.# , after which

it will again shift to #. # # #, # #.# #, # # #.# with Annunciation of “x1000”, It indicates the value in kA. Pressing the “⇩” key accepts the decimal point position and enters into Current Transformer Primary value edit.

Current Transformer Primary value Edit

Pressing the “⇧” key will scroll the value of the most significant digit. Pressing the “⇩” key accepts the present value at the cursor position and advances the cursor to the next Less significant digit. When the least significant digit has been set, pressing the “⇩” key will advance to the “Current transformer Primary Value confirmation” screen. When CT primary is set less than 1A, then meter shows “Err” and CT primary is set to 1A.

Note : the flashing dec
identify the scaling of th
At this stage the decim

Note : the flashing decimal point indicates the cursor position, a steady decimal point will be present to identify the scaling of the number until the cursor position coincides with the steady decimal point position. At this stage the decimal point will be flashing.

Current Transformer Primary Value Confirmation

This screen will only appear following an edit of the Current Transformer Primary Value. If the set value is to be corrected, pressing the “⇧” key will return to the “Current Transformer Primary Value Edit” stage. Pressing the “⇩” key sets the value and then advance to the “CT secondary” Selection menu.

3.1.3 Potential Transformer Secondary Value (for V)

This screen displays “Pt.S” message followed by previously set PT secondary value on display. user can set PT secondary value from **57.5V$_{LN}$ to 480V$_{LN}$** and default value **480VLN**.

Pressing the “⇩” key accepts the present value and advances to the measurement screen.

Pressing the “⇧” key will enter the “Potential transformer Secondary Value Most significant digit Selection.

Pressing the “⇩” key will scroll the value of the most significant digit.

Pressing the “⇧” key accepts the present value at the cursor position and advances the cursor to the next Less significant digit. When the least significant digit has been set, pressing the “⇩” key will advance to the

“Potential transformer secondary value confirmation” screen. For DPM V minimum PT secondary can set is 57.5V(L-N). otherwise meter shows “Err” and PT secondary is set to 57.5V(L-N).

Potential Transformer Secondary Value Confirmation

This screen will only appear following an edit of the Potential Transformer Secondary Value. If the set value is to be corrected, pressing the "⇧" key will return to the "Potential Transformer Secondary Value Edit" stage. Pressing the "⇩" key sets the value and then advance measurement screen.

3.1.4 Current Transformer Secondary Value (for A)

This screen is used to set Current transformer secondary value. "1" for CT secondary 1A and "5" for CT secondary 5A and default value **5A.** pressing "⇩" down key accepts the present value and advanced to the "measurement screen".

Current transformer Secondary confirmation screen:

When "⇩" down key is pressed , set message screen will appear, if again down key is pressed value is accepted. If CT secondary value is to be edit once again, pressing "⇧" up key user can scroll between ''5" for CT secondary 5A and "1" for CT secondary 1A.

4. Installation

Mounting of DPM is featured with easy “Click fiting” mounting. Push the meter in panel slot (size 92 x92 mm), it will click fit into panel with the four integral retention clips on two sides of meter.

If required Additional support is provided with swivel screws (optional) as shown in figure.

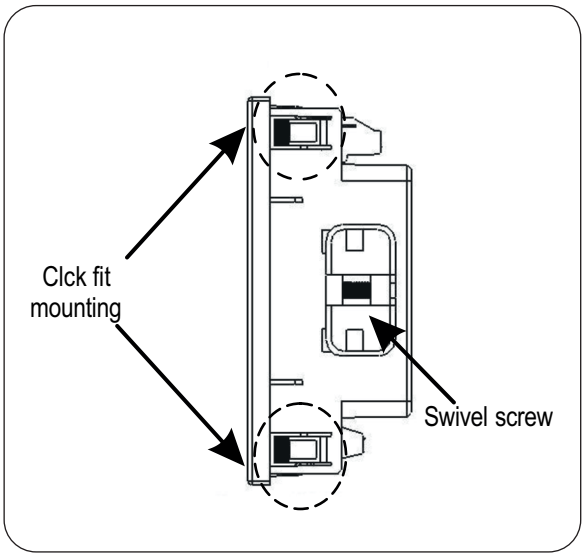

As the front of the enclosure conforms to IP 50. additional protection to the panel may be obtained by the use of an optional panel gasket. The terminals at the rear of the product should be protected from liquids.

The DPM should be mounted in a reasonably stable ambient temperature and where the operating temperature is within the range 0 to 50°C. Vibration should be kept to a minimum and the product should not be mounted where it will be subjected to excessive direct sunlight.

Caution

1. **In the interest of safety and functionality this product must be installed by a qualified engineer, abiding by any local regulations.**
2. **Voltages dangerous to human life are present at some of the terminal connections of this unit. Ensure that all supplies are de-energised before attempting any connection disconnection.**
3. **These products do not have internal fuses therefore external fuses must be used to ensure safety under fault conditions.**

4.1 EMC Installation Requirements

This product has been designed to meet the certification of the EU directives when installed to a good code of practice for EMC in industrial environments, e.g.

1. Screened output and low signal input leads or have provision for fitting RF suppression components, such as ferrite absorbers, line filters etc., in the event that RF fields cause problems.

Note: It is good practice to install sensitive electronic instruments that are performing critical functions, in EMC enclosures that protect against electrical interference which could cause a disturbance in function.

2. Avoid routing leads alongside cables and products that are, or could be, a source of interference.

3. To protect the product against permanent damage, surge transients must be limited to 2kV pk. It is good EMC practice to suppress differential surges to 2kV at the source. The unit has been designed to automatically recover in the event of a high level of transients. In extreme circumstances it may be necessary to temporarily disconnect the auxiliary supply for a period of greater than 5 seconds to restore correct operation.

4. ESD precautions must be taken at all times when handling this product.

4.2 Case Dimensions and Panel Cut Out

4.2.1 for 96x96 models

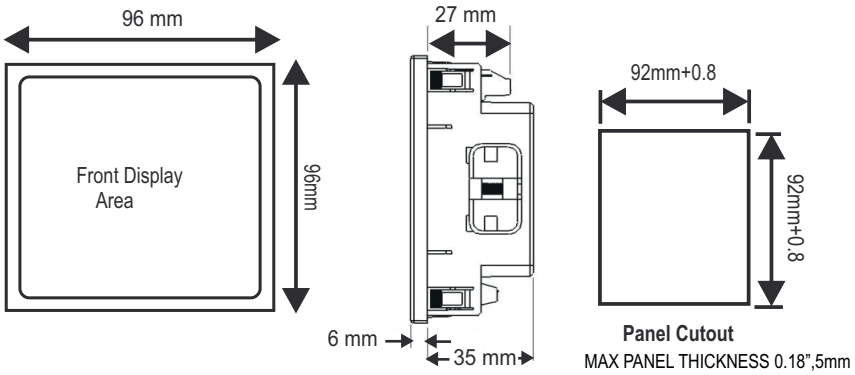

4.3 Wiring

Input connections are made directly to screw-type terminals with indirect wire pressure.

Numbering is clearly marked on the connector. Choice of cable should meet local regulations. Terminal for inputs will accept up to 4mm^2(12 AWG) or 2.5mm^2 stranded cable.

Note:

1) It is recommended to use wire with lug for connection with meter.
2) For disconnecting the device a switch or circuit-breaker shall be included at the site and shall be within easy reach of the operator. The specification are as below. For aux. = At least 1.5 times of applied Power supply.

   For Measuring Input = At least 1.5 times of applied measuring inputs.

4.4 Auxiliary Supply

DPM should ideally be powered from a dedicated supply, however it may be powered from the signal source, provided the source remains within the limits of the chosen auxiliary voltage.

4.5 Fusing

It is recommended that all voltage lines are fitted with 1 amp HRC fuse.

4.6 Earth/Ground Connections

For safety reasons, panels and accesoriess should be grounded in accordance

5. Connection Diagrams

5.1 Connections For DPM V

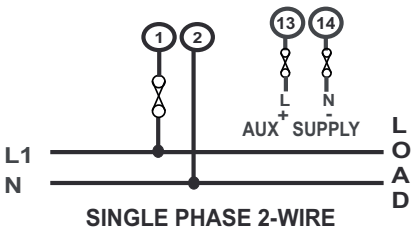

SINGLE PHASE 2-WIRE DIGITAL PANEL METER (External Aux.)

5.2 Connections For DPM A

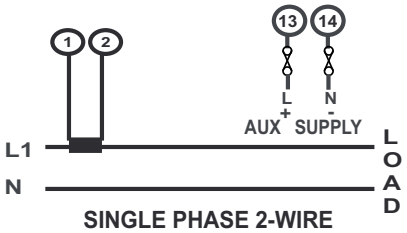

SINGLE PHASE 2-WIRE DIGITAL PANEL METER (External Aux.)

6. Specifications

Input voltage (V) :	
Nominal Input Voltage	480VLN (ACRMS) (FS)
Max continuous input voltage	519 VLN (OL>1.083 X PT Primary).
Nominal input voltage burden	<0.3 VA approx at 230V
System PT Primary values	57.5VL-N to 900kV L-N Programmable onsite
Input current (A) :	
Nominal Input Current Ranges	(1A or 5A)
System CT Primary values	1A to 9999A Programmable onsite
Max continuous input current	120% of CT Secondary.(OL>1.21 X CT Primary).
Nominal input current burden	<0.3VA approx. per phase
Overload Indication :	**"-oL-"**
	(If input is greater than 121% of secondary value for A)
	(If input is greater than 108.3% of secondary value For V)
Auxiliary Supply :	
AC-DC Auxiliary Supply	60V to 300V AC/DC (+/- 5%)
Frequency Range for AC Aux. Supply	45 to 65 Hz
VA Burden	5 VA Approx.
Overload Withstand :	
Voltage	600VLN for 1 Second, repeated 10 times at 10 second intervals.
Current	2 X 5A for 1 Second, repeated 5 times at 5 second intervals.
Operating Measuring Ranges	
Voltage Range	10V... 519V
Current Range	For 1A(15mA-1.2A) & For 5A(55mA-6A)
Frequency	40 ... 70 Hz

Reference conditions for Accuracy :	
Reference temperature	23°C + 2°C
Input waveform	Sinusoidal (distortion factor 0.005)
Auxiliary supply voltage	Nominal Value + 1 %
Auxiliary supply frequency	Nominal Value + 1 %
Input Frequency	50 Hz or 60 Hz + 2 %
Accuracy	
Voltage (V)	+ 0.5% of FS
Current (A)	+ 0.5% of 5A.
Temperature Coefficient	
Voltage	0.03% /°C
Current	0.05% /°C
Display	
LED	1 line 4 digits for A & 1 line 3 digit for V.
Digit height	14mm
Annunciator LEDs	For Displaying Units and Parameter
Controls	
User Interface	2 Touch Keys
Applicable Standards	
EMC	IEC 61326-1 (Table 2)
Safety	IEC 61010-1: 2010,Permantly Connected use
IP for water & dust	IEC 60529
Safety	
Pollution Degree	2
Installation Category	III
High Voltage Test	2 kV AC, 50 Hz for 1 minute between aux and measuring input

Environmental conditions	
Operating temperature	0 to 55°C
Storage temperature	-25 to 70°C
Relative humidity	0 .. 90 % (Non condensing)
Warm up time	Minimum 3 minute
Shock	Half sine wave, Peak acceleration 30gn (300 m/s^2).
Vibration	10 .. 55 Hz, 0.15mm amplitude
Enclosure	
Front	IP50
Back	IP20
Material	Polycarbonate Housing
erminals	Screw-type terminals
Dimension and weight:	
Bezel Size (DIN 43718)	96mm X 96mm (DIN 43718)
Panel Cut-Out	92 + 0.8mm X 92 + 0.8mm
Overall Depth	40mm
Weight	200g Approx

Contact

Sifam Tinsley Instrumentation Ltd

1 Warner Drive
Springwood Industrial Estate
Braintree
Essex
CM7 2YW

Tel: 01376 335271
Email: sales@sifamtinsley.com

www.sifamtinsley.co.uk

The Information contained in these installation instructions is for use only by installers trained to make electrical power installations and is intended to describe the correct method of installation for this product. However, Manufacturer has no control over the field condition which influence product installation.
It is the user's responsibility to determine the suitability of the installation method in the user's field conditions. Manufacturer only obligations are those in Manufacturer standard Conditions of Sale for this product and in no case will Manufacturer be liable for any other Incidental, indirect or consequential damages arising from the use or misuse of the products.