NA3 Digital Meters With Bargraph

Features

MOD BUS
RTC
Linear Chart
Password protection
IP 40

Input

DC
0..20 mA
60 mV
Password protection
0..10 v

Outputs

0..20 mA
0..10 V
RS 485

Galvanic Isolation

Supply
RS 485

- Universal input for the measurement of d.c. current, d.c. voltage and temperature,
- 3 or 7-colour bargraph,
- Programming of bargraph colour depending on the measured quantity value,
- Signalling of set alarm value over flow,
- Storage of measured signal in programmed time segments (750 samples),
- Current or voltage analog output,
- Communication in SCADA systems (RS485/Modbus interface RTU and ASCII).

Example of application

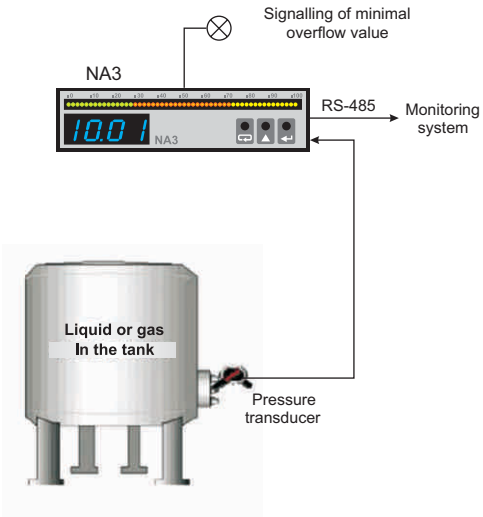

Inputs

Kind of input	Measuring range
Pt100	-200...850°C
Pt500	-200...850°C
Pt1000	-200...850°C
J (Fe-CuNi)	-30...1100°C
K (NiCr-NiAl)	-50...1370°C
N (NiCrSi-NiSi)	-100...1300°C
E (NiCr-CuNi)	-20...850°C
R (PtRh13-Pt)	0...1760°C
S (PtRh10-Pt)	0...1760°C
T (Cu-CuNi)	-50...400°C
Resistance	0...400 Ω, 0...4000 Ω
Voltage	0...60 mV, Rinp. > 9 MΩ 0...3 V, Rinp. > 4 MΩ 0...10 V, Rinp. > 4 MΩ 0...200 V, Rinp. > 4 MΩ 0... 600 V, Rinp. > 4 MΩ
Current	0...5 mA, Rinp. = 4 Ω 0...20 mA, Rinp. = 4 Ω 0...2 A, Rinp. = 10 mΩ 10% 0...5 A, Rinp. = 10 mΩ 10%

Outputs

Kind of output	Features
Analog output	• galvanic isolation with resolution 0.025% of range; current programmable 0/4...20 mA, load resistance ≤ 500 Ω voltage programmable 0...10 V, load resistance ≥ 500 Ω, output response time : 100 ms.
Relay output	• 1 or 2 relays; NOC voltage less contacts, maximal load-carrying capacity: - voltage : 250 V a.c., 150 V d.c. - current : 5 A 30 V d.c., 250 V a.c. - resistance load : 1250 VA, 150 W
Open collector (OC) type	• voltage less of OC type with npn transistor, maximal load : 25 mA, range of appended voltages: 5...24 V d.c.
Digital	• **interface type**: RS-485; **transmission protocol:** MODBUS ASCII (8N1, 7E1, 7O1), RTU (8N2, 8E1, 8O1, 8N1); **baud rate:** 2400, 4800, 9600 bit/s.

external features

Readout field	**NA3-F**	**4 LED displays** with 7 segments, digits of 7mm high, indication range -1999...9999 **multicoloured bargraph** of 82 mm long, 45 segments in a 3-colour version or with 25 segments in 7-colour version
	NA3-B	**multicoloured bargraph as above**
	NA3-D	**4 LED displays** with 7 segments, digits of 14 mm high, 3 alarm diodes, indication range as above.
Weight	< 0.3 kg	
Over all dimensions	96 ´24 ´125 mm	panel cut-out : $92^{+0,5}$ ´$22.2^{+0,5}$ mm
Protection grade (acc. to EN 60529)	IP40 from frontal side	IP20 from terminal side

NA3 Digital Meters With Bargraph

Rated Operating Conditions

Supply voltage	95...253 V a.c. / d.c., 20...40 V a.c. / d.c.	Power consumption <8VA
Temperature	ambient : -10..23...55°C	Storage : -25...85°C
Relative humidity	< 95%	Condensation inadmissible

Safety and Compatibility Requirements

Electro magnetic compatibility	noise immunity	acc. to EN61000-6-2
	noise emissions	acc. to EN61000-6-4
Safety requirements		acc. to EN61010-1

Table 1. Execution code

Digital Panel Meter with Bargraph - RNA3	X	X	X	X	X	X	X	X	XX	X
Meter version:										
With a bargraph and digital display	F									
With a bargraph*	B									
With a digital display	D									
Bargraph colour:										
Without bargraph (NA3D)		0								
3-colour bargraph (R, G, R+G)		T								
7- colour bargraph (R, G, B, R+G, R+B, G+B, R+G+B)		M								
Display colour:										
With out display			0							
Red			R							
Green			G							
Blue			B							
Input signal:										
universal input				U						
Analog output signal:										
Lack					0					
Current programmable 0/4...20 mA					1					
Voltage programmable 0...10 V					2					
Additional output:										
lack*						0				
RS-485 digital output + 1 relay						1				
RS-485 digital output + 1 output of OC type						2				
2 relays*						3				
2 outputs of OC type*						4				
Supply:										
95...253 V AC / DC							1			
20...40 V AC / DC							2			
on order**							X			
Kind of terminals:										
Socket-screw plug								0		
Version:										
Standard									00	
Custom-made**									XX	
Acceptance tests:										
Without an extra quality inspection certificate										8
Without an extra quality inspection certificate										7
Acc. to customer's request**										X

* - in case of a NA3-B X X X X (0, 3 or 4), one must fill the table 2
** - after agreeing with the manufacturer

Connection Diagrams

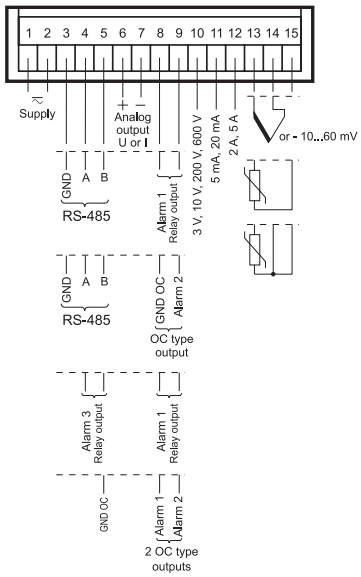

Fig. 1 External connections of the NA3 meter.

Programmable parameters of the NA3 meter

Table 2.

Input	Input type	tYP	
	Mathematical functions	Func	
	Kind of compensation	Con	
	Measuring averaging time	Cnt	
	Displayed characteristic	Indi	
	Measured value	I_H1	
	Displayed value	d_Y1	
	Measured value	I_H2	
	Displayed value	d_Y2	
Bargraph	Bargraph type	tYPb	
	Bargraph colour	coLr	
	Lower bargraph threshold	brL	
	Upper bargraph threshold	brH	
Alarm 1	Lower alarm threshold	PrL	
	Upper alarm threshold	PrH	
	Alarm type	tYPA	
	Delay of alarm operation	dLY	
	Support of alarm signalling	HOLd	
	Colour of the lower threshold alarm index	CurL	
	Colour of the upper threshold alarm index	CurH	
Alarm 2	Lower alarm threshold	PrL	
	Upper alarm threshold	PrH	
	Alarm type	tYPA	
	Delay of alarm operation	dLY	
	Support of alarm signalling	HOLd	
	Colour of the lower threshold alarm index	CurL	
	Colour of the upper threshold alarm index	CurH	
Alarm 3	Lower alarm threshold	PrL	
	Upper alarm threshold	PrH	
	Alarm type	tYPA	
	Delay of alarm operation	dLY	
	Support of alarm signalling	HOLd	
	Colour of the lower threshold alarm index	CurL	
	Colour of the upper threshold alarm index	CurH	
Output	Output characteristic	IndO	
	Displayed value	d_H1	
	Value on the analog output	O_Y1	
	Displayed value	d_H2	
	Value on the analog output	O_Y2	
	RS-485 baud rate	bAud	
	Kind of RS-485 transmission	trYb	
	Device address	Adr	

Ordering Example:

The code: **NA3 - F T R U 0 1 1 0 00 8** means:

- **NA3** - digital meter with bargraph of NA3 type,
- **F** - with a bargraph and digital display,
- **T** - with a 3- colour display,
- **R** - red display colour,
- **U** - universal input,
- **0** - lack of analog output signal,
- **1** - additional output : RS-485 digital output + 1 relay,
- **1** - supply voltage : 95...253 V a.c. / d.c.,
- **0** - socket-screw plug,
- **00** - standard version,
- **8** - without extra quality requirements.

sifam tinsley
PRECISION INSTRUMENTATION

Sifam Tinsley Instrumentation Ltd
1 Warner Drive, Springwood Industrial Estate, Braintree, Essex CM7 2YW
Contact No. : +44 (0) 1376 335271
Email: sales@sifamtinsley.com
www.sifamtinsley.co.uk

See Also

Temperature and humidity transducers P18 i P18L types.

Programmable transducer of temperature, resistance, voltage from shunt and standard signals - P20.

N30 digital meters with a 3-colour display and free PC Config program.

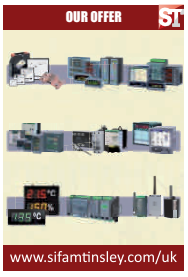

For more information about SIFAM's products please visit our website www.sifamtinsley.com/uk