sifam tinsley
PRECISION INSTRUMENTATION

DATASHEET Issue 1.2

NEW PRODUCT

MID CERTIFIED

Multifunction Meters

Transducers & Isolators

Temperature Controllers

Converters & Recorders

Digital Panel Meters

Current Transformers

Analogue Panel Meters

Shunts

Digital Multimeters

Clamp Meters

Insulation Testers

AP35-3RJ12

96mm² PANEL MOUNTED DIGITAL MULTIFUNCTION METER

(MID CERTIFIED)

Features

- MID B+D Certified
- Class 0.5 Accuracy
- Single & Three Phase
- Import / Export kWh
- Phase Summary Screen
- RJ12 Current Transformer connection
- Error Free “Plug in” installation
- Intelligent self-supplying auxiliary
- Total harmonic distortion (THD) and individual, up to the 63rd harmonic

SUBJECT TO CHANGE WITHOUT NOTICE
This manual superseded all previous versions – please keep for future reference

AP35-3RJ12

Features

- MID B+D Certified
- Class 0.5 Accuracy
- Single & Three Phase
- Import / Export kWh
- Phase Summary Screen
- RJ12 Current Transformer connection
- Error Free “Plug in” installation
- Intelligent self-supplying auxiliary
- Total harmonic distortion (THD) and individual, up to the 63rd harmonic

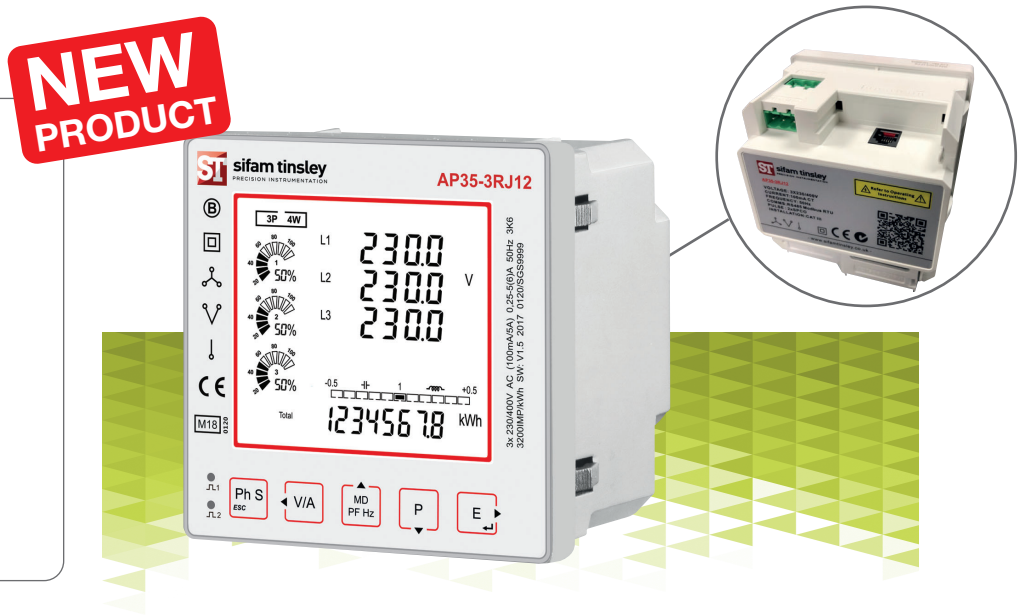

Sifam Tinsleys AP35-3RJ12 is a new generation modern design power monitor that will measure and display electrical power quality parameters. It has been engineered to cover most applications (Single Phase and Three Phase networks / Built in Pulsed and RS485 Modbus / Import and Export kWh), replacing the need for several different models of this power meter.

For ease of installation, this meter features RJ12 connectors. This is the quickest, most efficient way of connecting the meter to the current transformer.

The Sifam Tinsleys AP35-3RJ12 is produced to the highest quality and utilizes the latest microprocessor and technology. It has a backlit display and 16 different measuring parameters. This includes a negative power reading to indicate reversal of CT installation or connection. With built in pulsed outputs and RS485 Modbus RTU it is fully compatible for integration with BMS and remote monitoring systems.

Parameters

- Phase to Neutral Voltage (V)
- Phase to Phase Voltage (V)
- Phase Current (A)
- Voltage Total Harmonic Distortion (U%THD)
- Current Total Harmonic Distortion (I%THD)
- Frequency (Hz)
- Power Factor (PF)
- Current Max Demand (MD A)
- Power Max Demand (MD kW)
- Active Power (kW)
- Reactive Power (kVAr)
- Apparent Power (kVA)
- Import Active Energy (kWh)
- Export Active Energy (kWh)
- Total Active Energy (kWh)
- Import Reactive Energy (kVArh)
- Export Reactive Energy (kVArh)
- Total Reactive Energy (kVArh)

"Plug In" System

Our meter is designed to heavily reduce labour costs!
The Sifam Tinsleys AP35-3RJ12 meter features cleverly engineered Plug-in terminals, allowing for a quicker, simpler installation process. The unit comes supplied with Terminal plugs for traditional wiring as standard, alternatively the unit can be supplied with wiring looms for a quick, error-free installation. Wiring looms are available in a variety of different lengths, and also can be custom-made to order in the UK for a quick turnaround.

Once the meter has been mounted within a 92mm² panel cut-out, and all plugs have been connected to the meter, the clip in terminal covers can be attached the the back of the meter and sealed. This ensures that once the installation is completed, the wiring is tamper-proof and cannot be accessed again without breaking the seals.

Meter to CT RJ12 Cable

Pre-wired looms ensure an error-free install!
Instead of using traditional terminals, the RJ12 cable is a proven method of connecting the meter to the current transformer significantly quicker; eridicating human error.

See Page 9 for RJ12 Cable Options

RJ12 Current Transformers

The 3-phase current transformer range is for use with the AP35 meter which combines three traditional current transformers in one moulding case with a RJ12 connection for simple and easy error free installation.

Backlit Display

Ensuring the meter can be read at all times!
The display on the AP35 meter features a backlight, ensuring it can be clearly seen even in poor lighting conditions. The display also features graphs for visual representation of current load, clearly indicating if the system is under-performing, or if it is exceeding a safe load.

Comms Plugs

The Sifam Tinsleys AP35-3RJ12 has Pulsed outputs and Modbus RTU built in, removing the need to purchase additional comms modules.

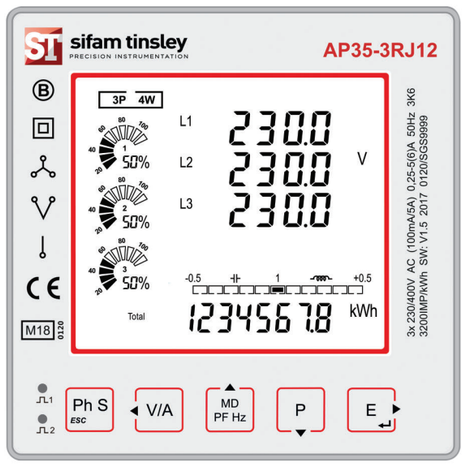

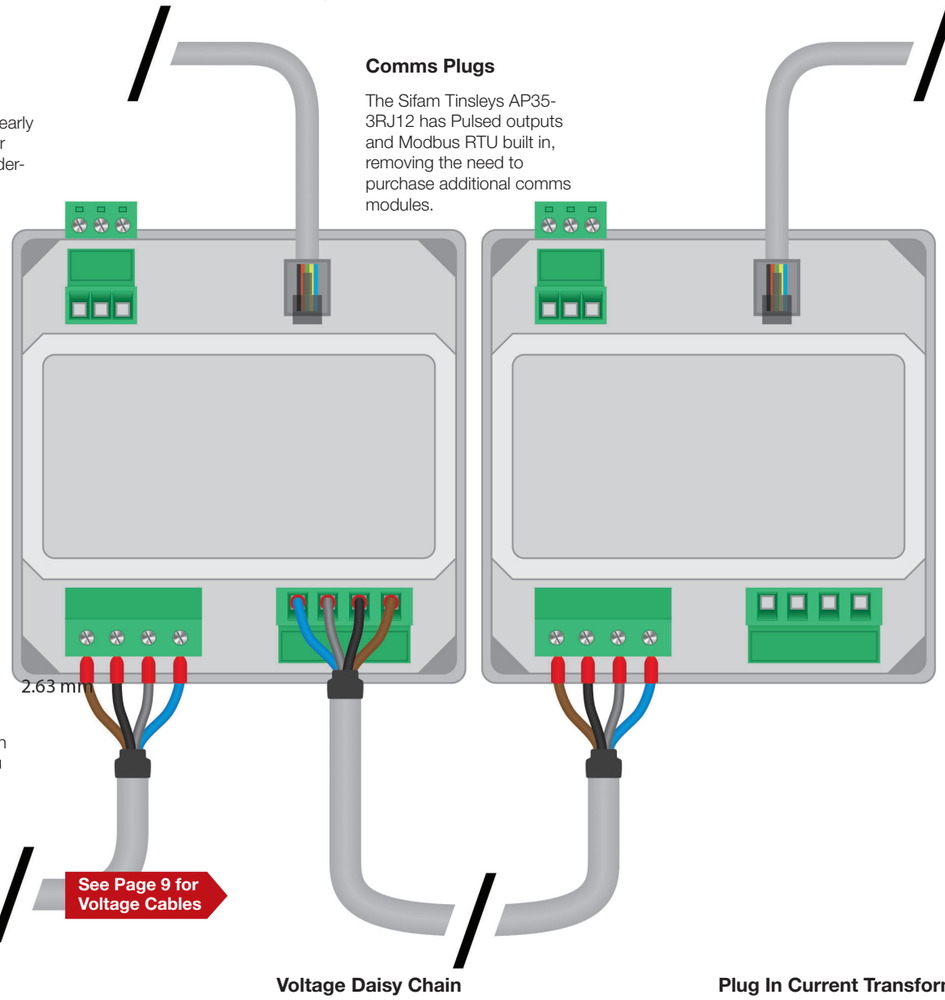

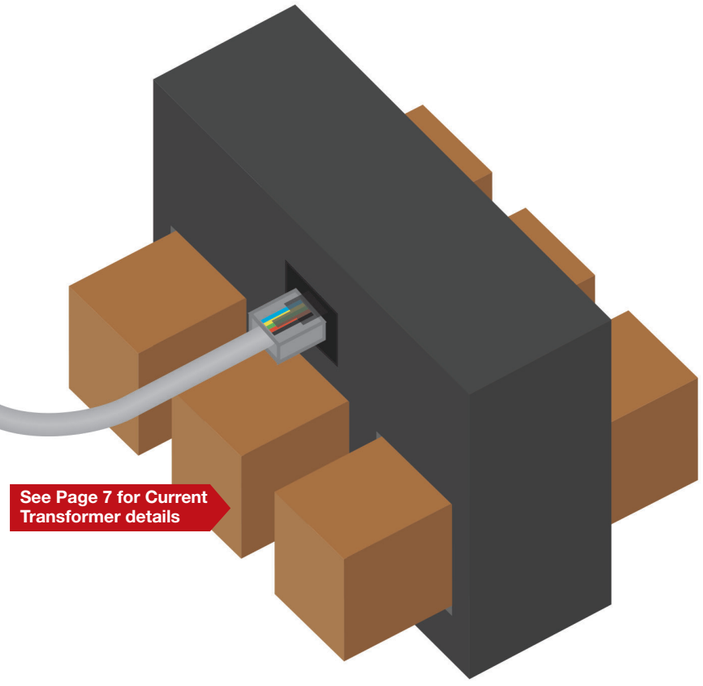

See Page 7 for Current Transformer details

Touch-sensitive Buttons

The touch-sensitive buttons of the AP35 make it easy to navigate through the various parameter screens. The meter also has a programming menu to configure the meter, this saves time in comparison to alternatives that require programming through modbus interogation.

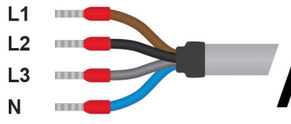

See Page 9 for Voltage Cables

Voltage to Fuse Loom

Quick and easy to connect, no auxiliary!
The pre-wired plug of the Voltage to Fuse loom clicks into the AP35 meter and has open tails on the other end for connection to the appropriate fused breaker.

The AP35 has an intelligent self-supplying auxiliary which draws power from any available phase connected, this guarantees that the meter stays powered and recording if one of the connected phases fails.

See Page 9 for Voltage Cables

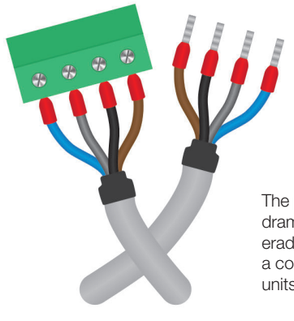

Voltage Daisy Chain

Cut down on fused terminals!
By using the Voltage to Voltage loom, you can reduce the number of fused terminals used on the installation. Up to 32 AP35 meters can be daisy chained from a single set of fuses.

See Page 9 for Voltage Cables

The pre-made looms are a proven method of dramatically reducing installation time, as well as eradicating potential human-error. The looms are a cost-effective alternative to hard-wiring the units.

Plug In Current Transformers

The three-in-one current transformers are available at a wide range of primary ratings as well as different window sizes, such as 15mm x 25mm (25mm Centres); 21mm x 25mm (35mm Centres); 32mm x 27mm (45mm Centres) and 52mm x 40mm (70mm Centres). Please request for a datahseet on the plug in transformers.

Specifications

Measured Parameters

The unit can monitor and display the following parameters of a Single Phase Two Wire (1P2W), Three Phase Three Wire (3P3W) or Three Phase Four Wire (3P4W) system.

Voltage and Current

- Phase to Neutral Voltages 100 to 276V AC (not for 3P3W supplies).
- Phase to Phase Voltages 174 to 480V AC (3 Phase supplies only).
- Percentage total Voltage Harmonic Distortion (U THD%) for each Phase to N (not for 3P3W supplies).
- Percentage Voltage THD% between Phases (3 Phase supplies only).
- Percentage total Current Harmonic Distortion (I THD%) for each Phase.

Power factor and Frequency and Max. Demand

- Frequency in Hz (45~66Hz)
- Instantaneous power:
- Power 0 to 999MW
- Reactive power 0 to 999MVAr
- Volt-amps 0 to 999MVA
- Maximum demanded power since last Demand reset Power factor
- Maximum neutral demand current, since the last Demand reset (for 3 Phase supplies only)

Energy Measurements

Imported/Exported active energy	0 to 9999999.9 kWh
Imported/Exported reactive energy	0 to 9999999.9 kVArh
Total active energy	0 to 9999999.9 kWh
Total reactive energy	0 to 9999999.9 kVArh

Measured Inputs

Voltage inputs through 4-way fixed connector with 2.5mm² stranded wire capacity. Single Phase Two Wire (1P2W), Three Phase Three Wire (3P3W) or Three Phase Four Wire (3P4W)

unbalanced. Line frequency measured from L1 Voltage or L3 Voltage. Three Current inputs for connection of external CTs with RJ12 cable. Nominal rated input Current 100mA AC RMS.

Nominal Voltage Input	100-276V AC (Ph+N) or 174-480V AC (Ph+Ph)
Max Continuous Voltage	120% of Nominal
Nominal Input Current	100mA AC RMS
Max Continuous Current	120% of Nominal
Frequency	50Hz ±10%

Accuracy

Voltage	0·5% of range maximum
Current	0·5% of nominal
Frequency	0·2% of mid-frequency
Power Factor	1% of unity (0.01)
Active Power (W)	±1% of range maximum
Reactive Power (VAr)	±1% of range maximum
Apparent Power (VA)	±1% of range maximum
Active Energy (Wh)	Class 0.5 IEC 62053-22
ReactiveEnergy (VARh)	Class 2 IEC 62053-23
Total Harmonic Distortion	1% up to 63rd harmonic

Auxiliary Supply

This unit does not require a separate auxiliary supply; the unit draws the necessary power from the voltage input connections. If a three phase supply is connected, and the phase that is powering the unit fails, it will change the phase supply to avoid shutting down.

Interfaces for External Monitoring

Three interfaces are provided:

- RS485 communication channel that can be programmed for Modbus RTU protocol
- Relay output indicating real-time measured energy.(configurable)
- Pulse output 3200imp/kWh (not configurable)

The Modbus configuration (baud rate etc.) and the pulse relay output assignments (kW/kVArh, import/export etc.) are configured through the set-up screens.

Pulsed Outputs

The pulsed outputs are “passive type” and comply with Class A IEC 62053-31. The pulse output can be set to generate pulses to represent kWh or kVArh.

The Pulse Rate can be set as follows:

0.001 = 1 pulse per 1 Wh/VArh (1000 pulses per kWh/kVArh)
0.01 = 1 pulse per 10 Wh/VArh (100 pulses per kWh/kVArh)
0.1 = 1 pulse per 100 Wh/VArh (10 pulses per kWh/kVArh)
1 = 1 pulse per 1 kWh/kVArh
10 = 1 pulse per 10 kWh/kVArh
100 = 1 pulse per 100 kWh/kVArh
1000 = 1 pulse per 1000 kWh/kVArh

The Pulse width can we set as 200/100/60 mS.

RS485 Output for Modbus RTU

For Modbus RTU, the following RS485 communication parameters can be configured from the set-up menu:

Baud rate 2400, 4800, 9600, 19200, 38400
Parity none (default) / even / odd
Stop bits 1 or 2
RS485 network address three digit number, 001 to 247

Response Time <100mS

Reference Conditions of Influence Quantities

Influence Quantities are variables that affect measurement errors to a minor degree. Accuracy is verified under nominal value (within the specified tolerance) of these conditions.

Ambient temperature	23°C ±1°C
Input waveform	50 or 60Hz ±2%
Input waveform	Sinusoidal (distortion factor < 0·005)
Auxiliary supply voltage	Nominal ±1%
Auxiliary supply frequency	Nominal ±1%
Auxiliary supply waveform (if AC)	Sinusoidal (distortion factor < 0·05)
Magnetic field of external origin	Terrestrial flux

Environment

Operating temperature	-25°C to +55°C*
Storage temperature	-40°C to +70°C*
Relative humidity	0 to 95%, non-condensing
Altitude	Up to 3000m
Warm up time	1 minute
Vibration	10Hz to 50Hz, IEC 60068-2-6, 2g
Shock	30g in 3 planes

*Maximum operating and storage temperatures are in the context of typical daily and seasonal variation.

Mechanics

Dimensions	96 x 96 x 74mm (WxHxD)
Mounting	DIN 96 (92mm² Cutout)
Sealing	IP51 indoor
Material	Self-extinguishing UL 94 V-0

Dimensions

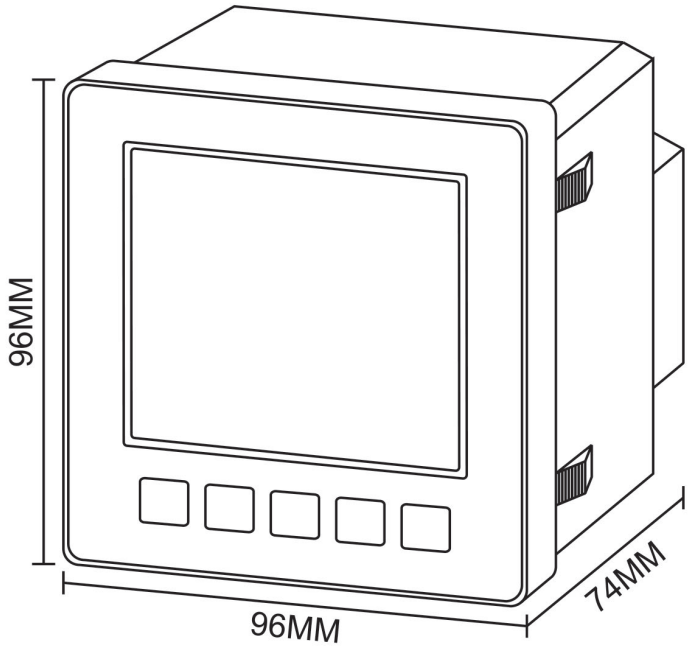

Installation 1.1

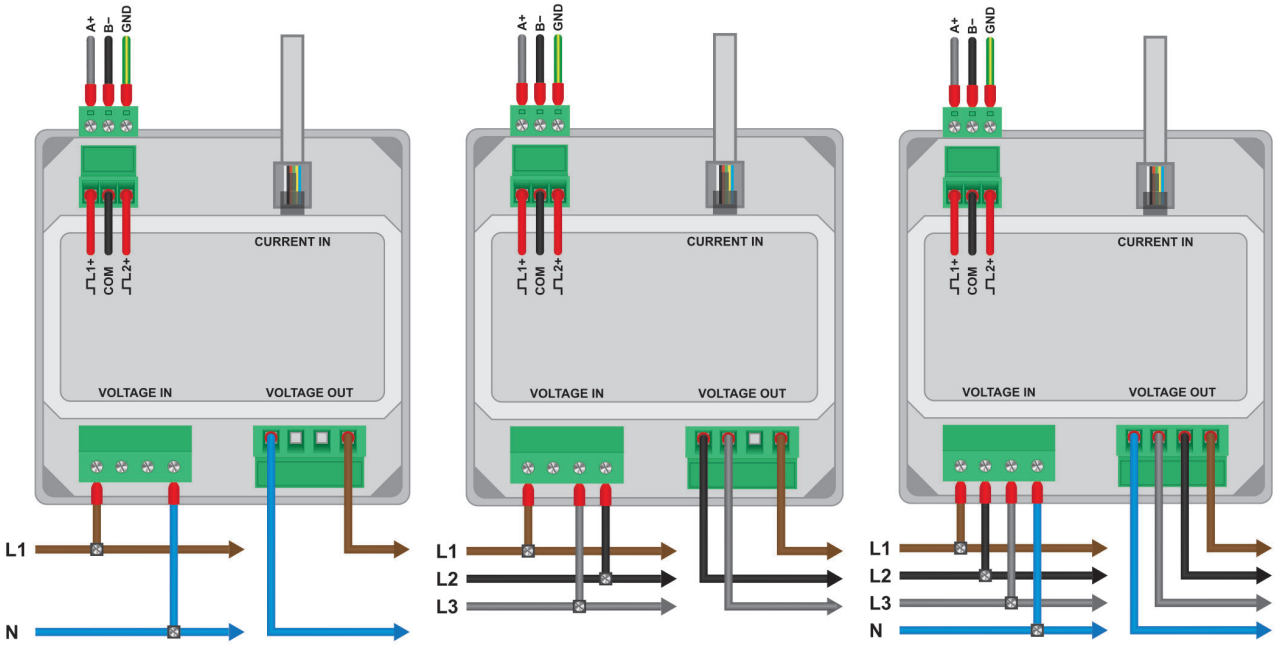

Single Phase Two Wire | Three Phase Three Wire | Three Phase Four Wire

RJ12

Features

- RJ12 Plug In Connection
- Multiple Sizes Available
- Simple, Error Free Connection
- CE Approved
- RJ12 Cable Included
- 100mA Secondary
- Fast and convenient way to connect current transformers via RJ12

RJ12 Current Transformers

The 3-phase current transformer range is for use with the AP15-3DL, AP35 and ND20CT meters which combines three traditional current transformers in one moulding case with a RJ12 connection for simple and easy error free installation.

3 Phase current transformers can be directly installed next to a three-phase moulded case circuit breaker, thus saving installation time where fitting three standard individual current transformers would be required.

In addition to the 3-phase current transformers, there is also a solid core single pole current transformer available for single phase applications. All 3 phase current transformers are supplied with a 1.5 metre connecting cable, with RJ12 connector termination at each end. Nominal rated secondary current 100mA AC RMS per phase.

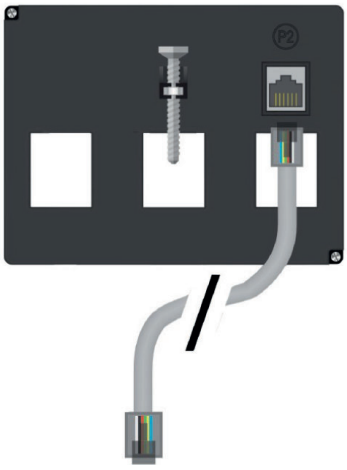

Specification

System Voltage	720V maximum
Primary Input currents	50-600A AC
Test Voltage	3kV for 1 minute
System Frequency	50Hz or 60Hz
Primary Ratings Secondary Output	100mA AC RMS per Phase
Overload Withstand	1.2x rated current continuously
Enclosure	Flame retardant grade classified UL94V-0
Aperture Hole Centres (3-phase CTs only)	25mm / 35mm / 45mm
Operating Temperature	-20°C to +85°C
Compliant With Accuracy	IEC/EN 60044-1 Class 0.5, Class 1

RJ12 Single Phase Current Transformer

Case:44mm wide x 45mm deep x 77.5mm high. Aperture 21.5mm Diameter

Part Number	RATIO	VA at CL0.5	VA at CL1
XJ12-132235S000000	50A/100mA	-	0.25VA
XJ12-142235S000000	60A/100mA	-	0.25VA
XJ12-182235S000000	100A/100mA	0.25VA	0.35VA
XJ12-202235S000000	125A/100mA	0.25VA	0.35VA
XJ12-222235S000000	150A/100mA	0.25VA	0.35VA
XJ12-232235S000000	160A/100mA	0.25VA	0.35VA
XJ12-242235S000000	200A/100mA	0.25VA	0.5VA
XJ12-272235S000000	250A/100mA	0.25VA	0.5VA

RJ12 Three Phase Current Transformer (25mm Centres)

Case: 76mm wide x 75.5mm deep x 80mm high. Aperture: 3 @ 15mm Diameter

Part Number	RATIO	VA at CL0.5	VA at CL1
XJ25-142231S000000	60A/100mA	-	0.25VA
XJ25-182235S000000	100A/100mA	0.25VA	0.35VA
XJ25-202235S000000	125A/100mA	0.25VA	0.35VA
XJ25-222235S000000	150A/100mA	0.25VA	0.35VA
XJ25-232235S000000	160A/100mA	0.25VA	0.35VA
XJ25-242235S000000	200A/100mA	0.25VA	0.35VA

RJ12 Three Phase Current Transformer (35mm Centres)

Case: 107mm wide x 49.5mm deep x 70mm high. Aperture 22 x 21mm

Part Number	RATIO	VA at CL0.5	VA at CL1
XJ35-142231S000000	60A/100mA	-	0.25VA
XJ35-182235S000000	100A/100mA	0.25VA	0.35VA
XJ35-202235S000000	125A/100mA	0.25VA	0.35VA
XJ35-222235S000000	150A/100mA	0.25VA	0.5VA
XJ35-232235S000000	160A/100mA	0.25VA	0.5VA
XJ35-242235S000000	200A/100mA	0.25VA	0.5VA
XJ35-272235S000000	250A/100mA	0.25VA	0.5VA

RJ12 Three Phase Current Transformer (45mm Centres)

Case: 142wide x 52mm deep x 85mm high. Aperture 32 x 27mm

Part Number	RATIO	VA at CL0.5	VA at CL1
XJ45-272235S000000	250A/100mA	0.25VA	0.5VA
XJ45-312235S000000	400A/100mA	0.25VA	0.5VA
XJ45-332235S000000	600A/100mA	0.25VA	0.5VA

Dimensions

Single Phase RJ12 Current Transformer

Case:44mm wide x 45mm deep x 77.5mm high. Aperture 21.5mm Diameter

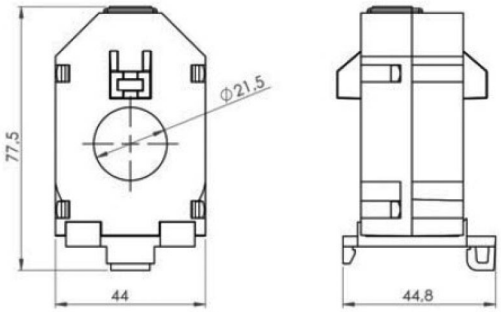

Three Phase RJ12 Current Transformer (25mm Centres)

Case: 76mm wide x 75.5mm deep x 80mm high. Aperture: 3 @ 15mm Diameter

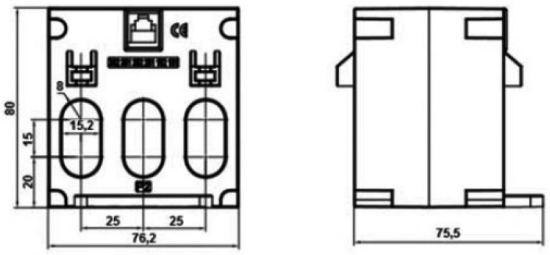

Three Phase RJ12 Current Transformer (35mm Centres)

Case: 107mm wide x 49.5mm deep x 70mm high. Aperture 22 x 21mm

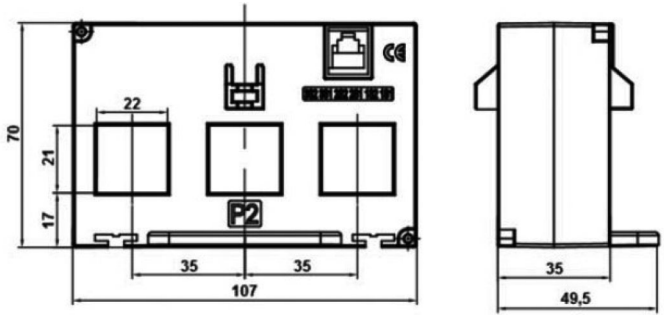

Three Phase RJ12 Current Transformer (45mm Centres)

Case: 142wide x 52mm deep x 85mm high. Aperture 32 x 27mm

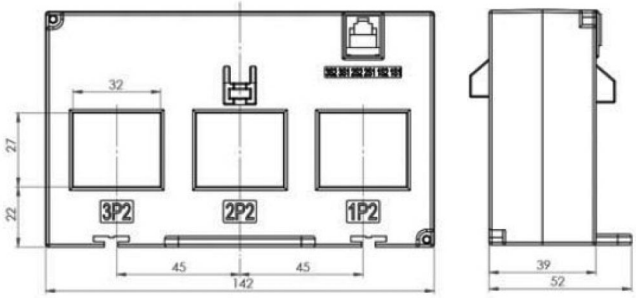

Optional RJ12 Cables

RJ12CABLE-0SP	RJ12 Cable 1 Metres, single Phase cable, Colour Black
RJ12CABLE-1SP	RJ12 Cable 1.5 Metres, single Phase cable, Colour Black
RJ12CABLE-2SP	RJ12 Cable 2 Metres, single Phase cable, Colour Black
RJ12CABLE-0SW	RJ12 Cable 1 Metres, straight cable, Colour white/grey
RJ12CABLE-1SW	RJ12 Cable 1.5 Metres, straight cable, Colour white/grey
RJ12CABLE-2SW	RJ12 Cable 2 Metres, straight cable, Colour white/grey
RJ12CABLE-0CB	RJ12 Cable 1 Metres, reversed cable, Colour Black
RJ12CABLE-1CB	RJ12 Cable 1.5 Metres, reversed cable, Colour Black
RJ12CABLE-2CB	RJ12 Cable 2 Metres, reversed cable, Colour Black

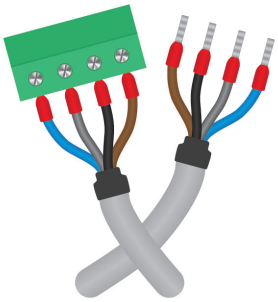

Voltage to Fuse Cable Options

Part Number	Description
VFCABLE053P	Voltage to Fuse (Flex) 0.50 Metre
VFCABLE103P	Voltage to Fuse (Flex) 1.00 Metre
VFCABLE153P	Voltage to Fuse (Flex) 1.50 Metre
VFCABLE203P	Voltage to Fuse (High Flex) 2.00 Metre
VFCABLE303P	Voltage to Fuse (High Flex) 3.00 Metre

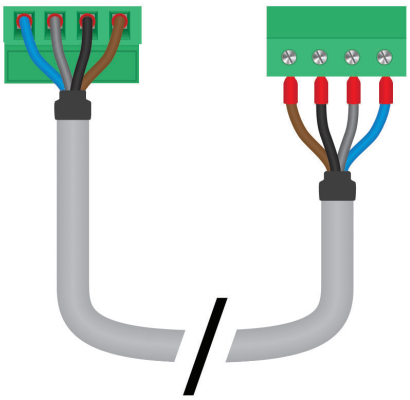

Voltage Daisy Chain Cable Options

Part Number	Description
VVCABLE053P	Voltage Daisy Chain (Flex) 0.50 Metre
VVCABLE103P	Voltage Daisy Chain (Flex) 1.00 Metre
VVCABLE153P	Voltage Daisy Chain (Flex) 1.50 Metre
VVCABLE203P	Voltage Daisy Chain (High Flex) 2.00 Metre
VVCABLE303P	Voltage Daisy Chain (High Flex) 3.00 Metre

Note: Other cables lengths available on request.

RJ12 3 Phase Current Transformer installation

Note: RJ12 3 phase current transformers are supplied with 1.5 metres of straight RJ12 cable (as highlighted in Set-up 1 diagram) for reversed phased connections it is necessary to purchase the optional reversed RJ12 cable.

Set-up 1, Straight RJ12 Lead
Please Check User Manual

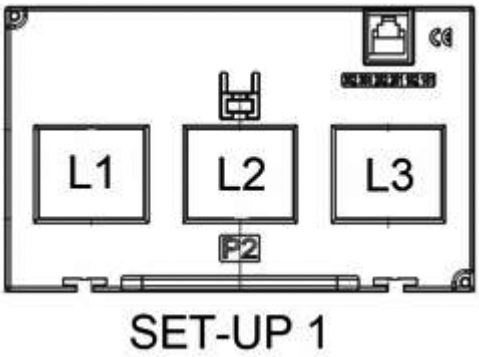

Set-up 2, Reversed RJ12 Lead
Please Check User Manual

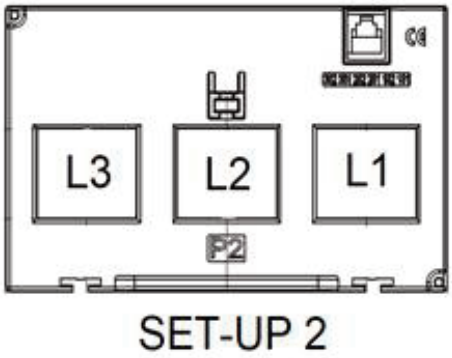

Contact

Sifam Tinsley Instrumentation Ltd

1 Warner Drive
Springwood Industrial Estate
Braintree, Essex
CM7 2YW

Tel: 01376 335271
E-mail: sales@sifamtinsley.com

www.sifamtinsley.co.uk