sifam tinsley
PRECISION INSTRUMENTATION

DATASHEET Issue 1

Multifunction Meters

Transducers & Isolators

Temperature Controllers

Converters & Recorders

Digital Panel Meters

Current Transformers

Analogue Panel Meters

Shunts

Digital Multimeters

Clamp Meters

Insulation Testers

AP15-***-RJ12 (*** TRI, **** QUAD) MULTI CHANNEL MULTI FUNCTION ENERGY METER

Product Characteristics

- 100mA CT connected
- Up to 4 x Three-Phase Current transformer
- Multi parameters measurement
- Plug-in solution
- LCD with white backlit, adjustable backlit time
- Quad loads measurement

SUBJECT TO CHANGE WITHOUT NOTICE
This manual superseded all previous versions – please keep for future reference

AP15-***-RJ12 (*** TRI, ****

Features

- 100mA CT connected
- Up to 4 x Three-Phase Current transformer
- Multi parameters measurement
- Plug-in solution
- LCD with white backlit, adjustable backlit time
- Quad loads measurement

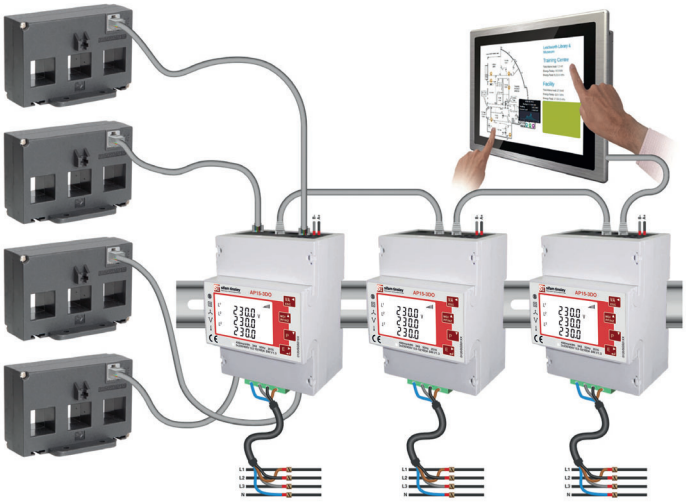

AP15-*-RJ12 is a new multifunction energy meter** designed for multi channel measurements (up to 4 channels) for 1p2w, 1p3w, 3p3w and 3p4w electrical systems, it provides all important electrical parameters such as:- voltage, current, power, PF, THD, frequency, demand, energy (import and export kWh). By using the RJ12 plug-in connectors system this meter provides an fast connect solution saving up to 80% on installation time and avoiding errors/mistake within wiring.

The AP15-***-RJ12 is compactly designed and can be used as 3/4x three phase energy meters or 9/12x single phase energy meters with 100mA input in conjunction with our RJ12 fast connect external current transformers.

With built in RS485 communication ports remote reading and programming. An integrated backlit display four touch buttons to allow the user to scroll between the electrical parameters and function modes for monitoring and programming.

Measurements Parameters

Phase voltage:	V1, V2, V3
Line voltage:	V1-2, V2-3, V3-1
Current:	I1, I2, I3
Active power:	P1, P2, P3, P_total (total active power)
Reactive power:	Q1, Q2, Q3, Q_total (total reactive power)
Apparent power:	S1, S2, S3, S_Total (total apparent power)
Frequency:	Hz
Power factor:	PF
Active energy:	Ep_imp (import active energy), Ep_exp (export active energy), Ep_total (total active energy)
Reactive energy:	Eq_imp (import reactive energy), Eq_exp (export reactive energy), Eq_total (total reactive energy) THD-I and THD-U
Maximum demand:	MD
Max./Min. value:	Max/Min

Setup Parameters

RS485 Modbus
CT1, CT2, *CT3,** CT4 (TRI *, QUAD **)
CT reverse connection
Backlit time
Demand Interval Time
Supply system 1p2w, 1p3w,3p3w,3p4w
Password

1. Technical parameters

Specification

Voltage and Current

Voltage AC (Un):	3*230/400VAC
Voltage range:	50 - 600VAC
Auxiliary power supply:	85 - 300VAC
Primary current input:	1 - 9999A
Secondary current input:	100mV (optional：100mA)
Overcurrent withstand:	20Imax for 0.5s

Frequency

Rated value:	50/60Hz,
Range:	45 - 65Hz

Accuracy

Voltage:	0.5%
Current:	0.5%
Frequency:	0.2%
Active power:	1%
Reactive power:	1%
Apparent power:	1%
Active energy:	Class1
Reactive energy:	Class2
Power factor:	1%

Built in RS485 communication

Bus type:	RS485
Protocol:	Modbus RTU
Baud rate:	2400/4800/9600(default)/19200/38400bps
Address range:	1-247
Max. Bus loading:	64pcs
Communication distance:	1000m
Parity:	EVEN/ODD/NONE (default)
Data bit:	8
Stop bit:	1

Performance

Operation humidity:	≤90%
Storage humidity:	≤95%
Operating temperature:	-25°C ~+55°C
Storage temperature:	-40°C ~+70°C
International standard:	IEC62053-21/ EN50470-1/3
Accuracy class:	Class 1
Installation category:	CATIII
Protection against penetration of dust and water:	IP51 (indoor)
Insulating encased meter of protective class:	II
◆ Altitude:	≤2000m

Button	Short click		Long press (3s)	
	Display mode	Setup mode	Display mode	Setup mode
V/A ESC	V1 V2 V3 V1-2 V2-3 V3-1 I1 I2 I3I in V%THD 1%THD	Return to previous menu		**Escape**
MD PF Hz	Hz PF PF1 PF2 PF3 MD of I1 I2 I3 MD of Power	Previous page or increase value	Check meter information (Address, Baudrate, Parity, CT1, SWV, Full Screen)	
P CH	P1 P2 P3 Q1 Q2 Q3 S1 S2 S3 P-t-Q-t-S-t	Next page or decrease value	Cahnge Channel (CH01~CH04)	
E	Active E-t Reactive E-t side Imp Active E Exp Active E Imp Reactive E Exp Reactive E	Move to right	Get into Setup mode	Confirm setting

2. Dimensions

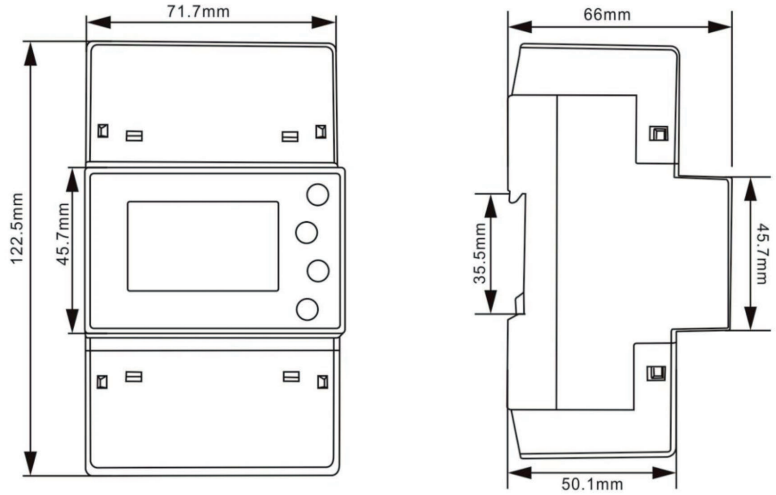

3. Installation

Three Phase 4 Wires

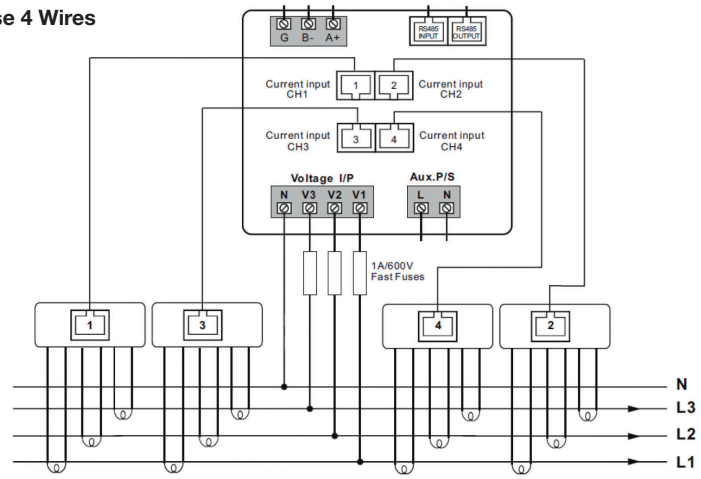

Display

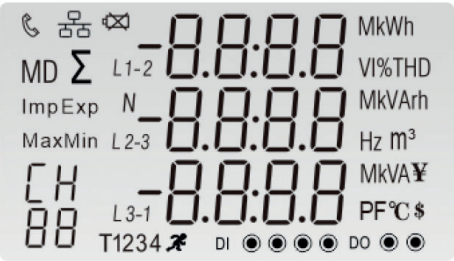

Three Phase 3 Wires

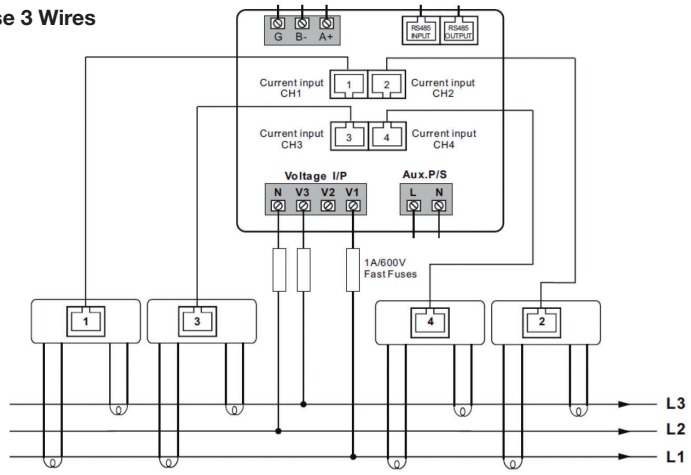

Single Phase 2 Wires

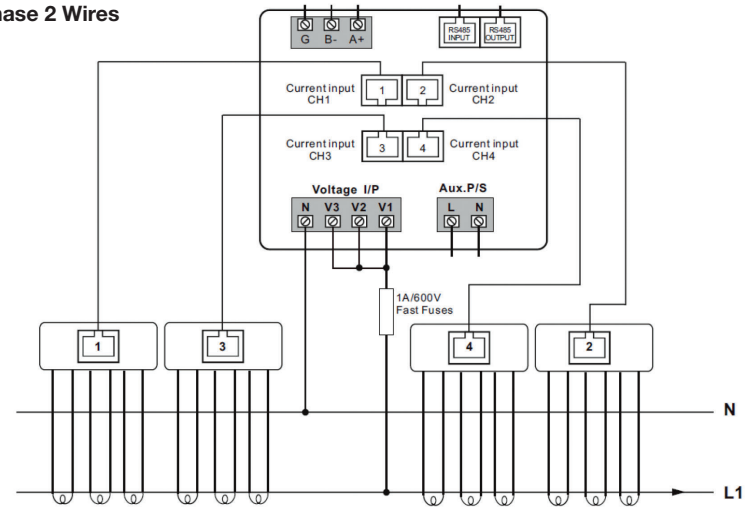

Single Phase 3 Wires

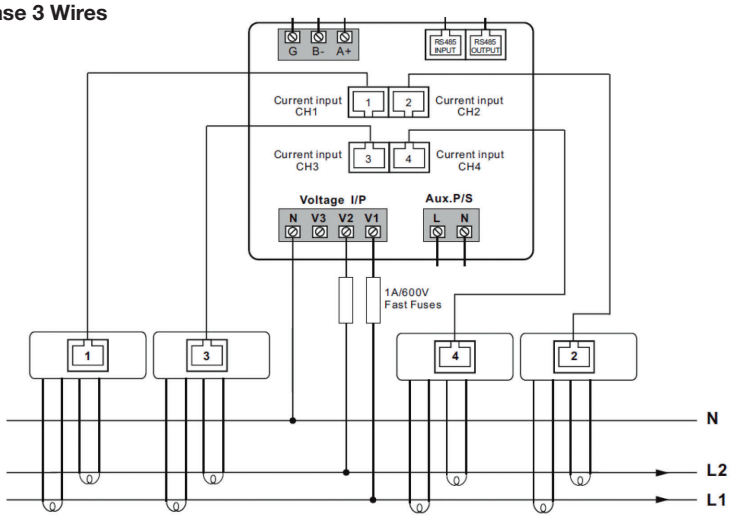

Contact

Sifam Tinsley Instrumentation Ltd

1 Warner Drive
Springwood Industrial Estate
Braintree, Essex
CM7 2YW

Tel: 01376 335271
E-mail: sales@sifamtinsley.com

www.sifamtinsley.co.uk