N30B DIGITAL PANEL RECORDER

Features :

Password protection

21points charact.

MEM

SD 4GB

three-colour display

IP65

Inputs :

2x RS 485

MOD BUS

Outputs

0..20 mA

0..10 V

RS 485

MOD BUS

Galvanic Isolation

RS 485

RS 485

Supply

- Data readout and recording from devices with RS485 interface and Modbus RTU protocol.
- 2 x RS485 interface with Modbus RTU protocol (Master and Slave).
- 3-colour display (14 mm height), programmable in 3 ranges of the displayed value.
- 21-point individual characteristic (indication rescaling).
- Internal memory (350064 records).
- Data archiving on MMC/SD card with capacity up to 4 GB.
- Data archiving on PC in MySQL database.
- Conversion into an analog signal (0...10V or 0/4...20mA).
- Indication of capacity exceeding of MMC/SD card.
- RTC with daylight saving time (DST) automatic adjustment.

Example of application

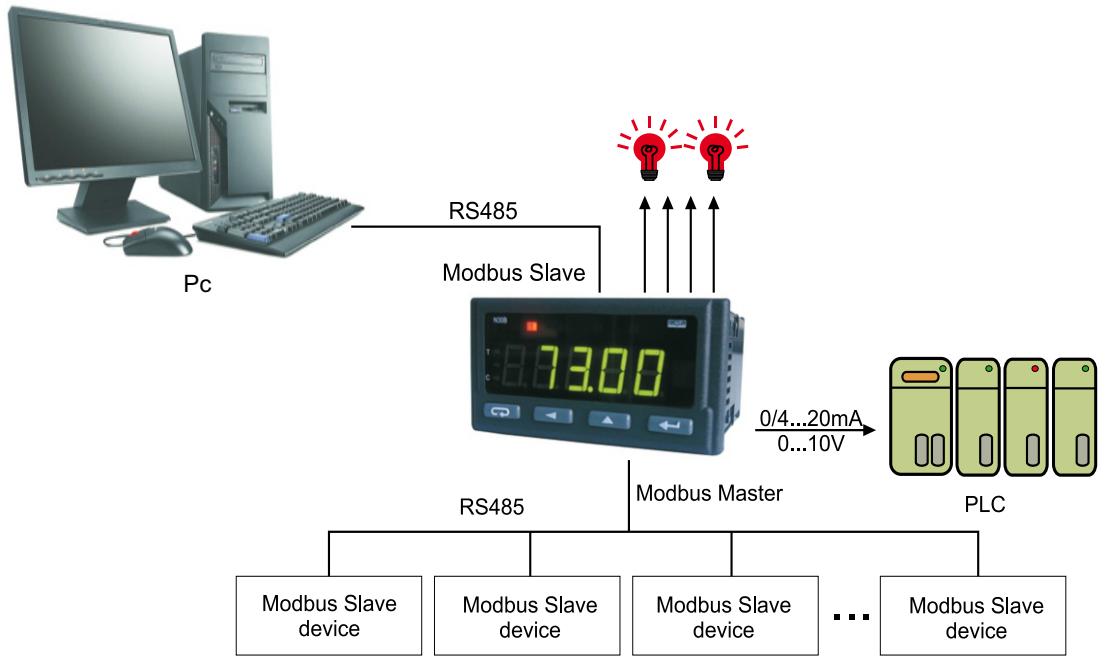

Data presentation and recording from control-measurement devices.

Memory

Memory type	Storage capacity	Remarks
Internal	308000 records	
Memory card	up to 4 GB (512MB card - ca. 34 560 000 records)	MMC / SD card

Outputs

Output type	Properties	Remarks
Relay output	•2 x relays, voltageless NO contacts load-carrying capacity 250 V a.c./ 0.5 A a.c. •2 x relays, voltageless change-over contacts load-carrying capacity 250 V a.c./ 0.5 A a.c.	
Analog output	•current programmable 0/4..20mA, load resistance ≤ 500 Ω •voltage programmable 0...10 V load resistance ≥ 500 Ω	Error of analog output: **0.2% of the set range** Additional error from temperature changes: **50% of the class/10K**
OC output	•typu OC, passive npn, 30 V d.c./30 mA	Voltageless output

Digital Interface

	Transmission protocol	Modes	Baud rates
RS-485	MODBUS RTU Master MODBUS RTU Slave	8N2, 8E1, 8O1, 8N1	4.8, 9.6, 19.2, 38.4, 57.6, 115.2 kbit/s

N30B DIGITAL PANEL rEcOrDEr

External Features

Readout field	5 digit LED display - indication range -19999..99999 digit height: 14 mm	three-color display (colour changes depending on displayed value): red, green, orange
Weight	< 0.2 kg	
Dimensions	96 ´ 48 ´ 93 mm	Panel cut-out: $92^{+0,6}$ ´ $45^{+0,6}$ mm
Protection grade (acc. to EN 60529)	from frontal side: IP65	from rear side: IP 10

Rated Operating Conditions

Supply voltage	85...253 V a.c. (40...400 Hz); 90 ... 320 V d.c. 20...40 V a.c. (40...400 Hz); 20 .. 60 V d.c.	
Temperature	ambient: -25...23...55°C	storage: -30...70°C
Relative humidity	25...95%	condensation inadmissible
Operating position	any	
External magnetic field	0...400 A/m	

Safety And Compatibility Requirements

Electromagnetic compatibility	Noise immunity	acc. to EN 61000-6-2
	Noise emissions	acc. to EN 61000-6-4
Isolation between circuits	basic	acc. to EN 61010-1
Pollution grade	2	
Installation category	III	
Maximal phase-to-earth operating voltage	for the supply circuit: 300 V	
	for remaining circuits: 50 V	
Altitude above sea level	< 2000 m	

Connection diagrams

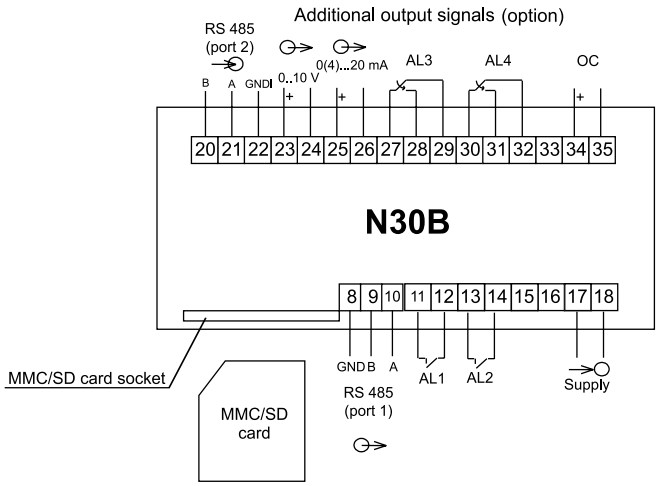

Ordering

Table 1. Ordering codes:

N30B -	X	X	XX	XX	X	X
Supply:						
85...253 V a.c. (40 ... 400 Hz); 90...320 V d.c.	1					
20...40 V a.c. (40 ... 400 Hz); 20...60 V d.c.	2					
Additional outputs:						
lack		0				
OC output, RS485 (port 2), analog outputs		1				
OC output, RS485 (port 2), analog outputs switched -over relay outputs		2				
Unit:						
unit code acc. to the table 2			XX			
Version:						
standard				00		
custom-made*				XX		
Language:						
Polish					P	
English					E	
other*					X	
Acceptance tests:						
without extra requirements						8
with an extra quality inspection certificate						7

* - after agreeing with the manufacturer

Table 2. codes of highlighted unit:

Code	Unit	Code	Unit	Code	Unit
00	lack of unit	20	kVAh	40	szt
01	V	21	MVAh	41	imp
02	A	22	Hz	42	rps
03	mV	23	kHz	43	m/s
04	kV	24	Ω	44	l/s
05	mA	25	kΩ	45	obr/min
06	kA	26	°C	46	rpm
07	W	27	°F	47	mm/min
08	kW	28	K	48	m/min
09	MW	29	%	49	l/min
10	var	30	%RH	50	m^3/min
11	kvar	31	pH	51	szt/h
12	Mvar	32	kg	52	m/h
13	VA	33	bar	53	km/h
14	kVA	34	m	54	m^3/h
15	MVA	35	l	55	kg/h
16	kWh	36	s	56	l/h
17	MWh	37	h		
18	kvarh	38	m^3	XX	on order*
19	Mvarh	39	obr		

See also :

HMI operatos panels MT series.

Programmable logic controller SMC.

For more information about Our products please visit our website:
www.sifamtinsley.com

N30B/2015/02

sifam tinsley PRECISION INSTRUMENTATION

Sifam Tinsley Instrumentation Ltd
1 Warner Drive, Springwood Industrial Estate, Braintree, Essex CM7 2YW
Contact No. : +44 (0) 1376 335271 Email: sales@sifamtinsley.com www.sifamtinsley.co.uk