sifam tinsley
PRECISION INSTRUMENTATION



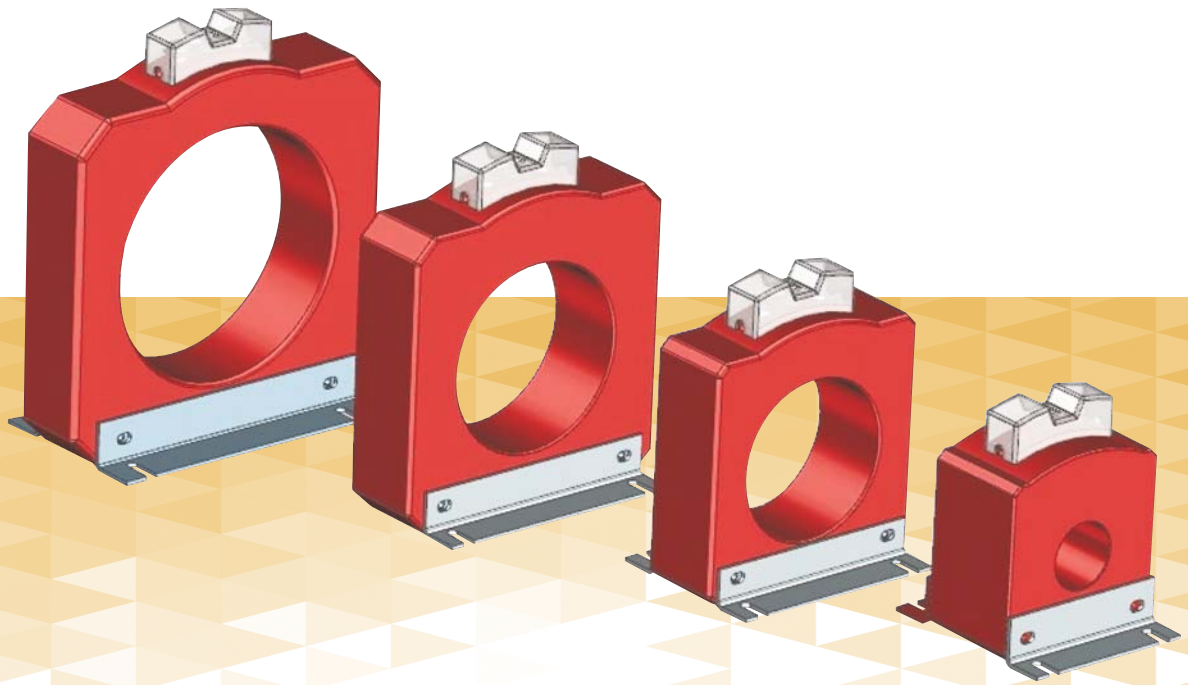

Multifunction Meters

Transducers & Isolators

Temperature Controllers

Converters & Recorders

Digital Panel Meters

Current Transformers

Analogue Panel Meters

Shunts

Digital Multimeters

Clamp Meters

Insulation Testers

# LTRC SERIES - RESIN CAST CURRENT TRANSFORMER

User Manual - Issue 1.0

**SUBJECT TO CHANGE WITHOUT NOTICE**
This manual superseded all previous versions – please keep for future reference

LTRC Series - Resin Cast

## Features

- Compact size
- Wide range of system current Ratings
- Transparent terminal cover
- Wall mounting.
- Terminal with self lifting screw

## General Specification

| | |
|---|---|
| Applicable standard: | IEC61869-1 & 2 |
| Case: | Epoxy Resin |
| Insulation class: | E(120°C max) |
| Test voltage: | 3KV 50 Hz for 1 minute |
| Operating frequency: | 50Hz |
| Rated Primary current: | 100A to 1200A |
| Rated secondary current: | 5A standard |
| Continuous current: | 1.2X Rated current |
| Rated system voltage: | 0.72/3KV |
| Ambient temperature range: | 25 to +40°C |
| Storage temperature range: | 50 to +80°C |

## LTRC-1 Series

### LTRC-1 80/30(50)

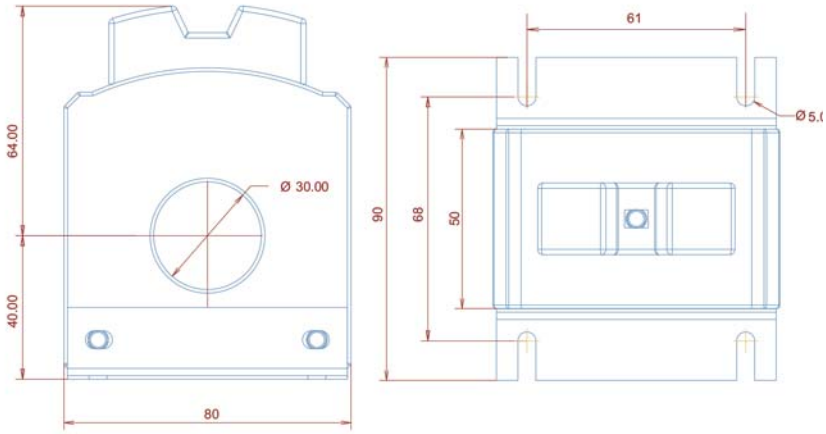


| LTRC-1 80/30(50) | | |
|---|---|---|
| Ratio | VA | Class |
| 100 | 5 | 1 |
| 125 | 5 | 1 |
| 150 | 5 | 1 |

## LTRC-2 Series

### LTRC-2 90/50(40)

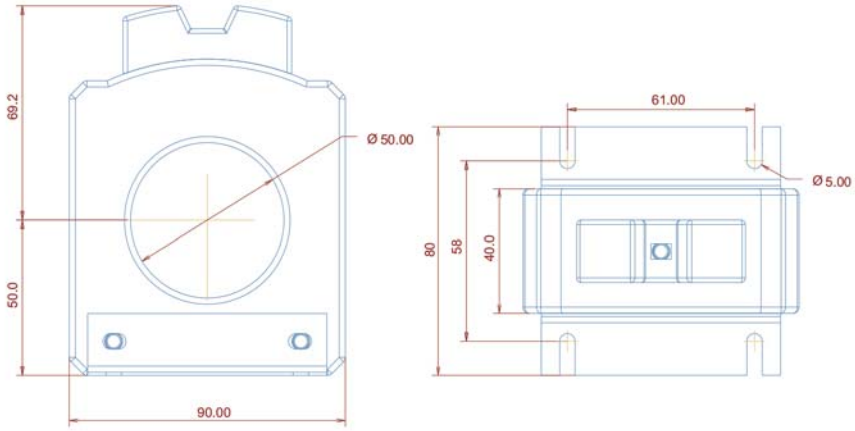


| LTRC-2 90/50(40) | | |
|---|---|---|
| Ratio | VA | Class |
| 200 | 10 | 1 |
| 250 | 10 | 1 |
| 300 | 10 | 1 |

## LTRC-3 Series

### LTRC-3 110/72(40)

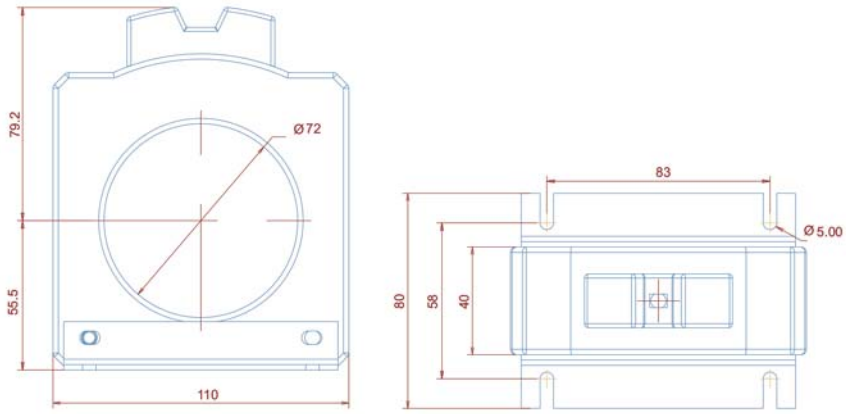


| LTRC-3 110/72(40) | | |
|---|---|---|
| Ratio | VA | Class |
| 400 | 15 | 1 |
| 500 | 15 | 1 |
| 600 | 15 | 1 |
| 630 | 15 | 1 |

**LTRC-4 Series**

**LTRC-4 135/85(40)**

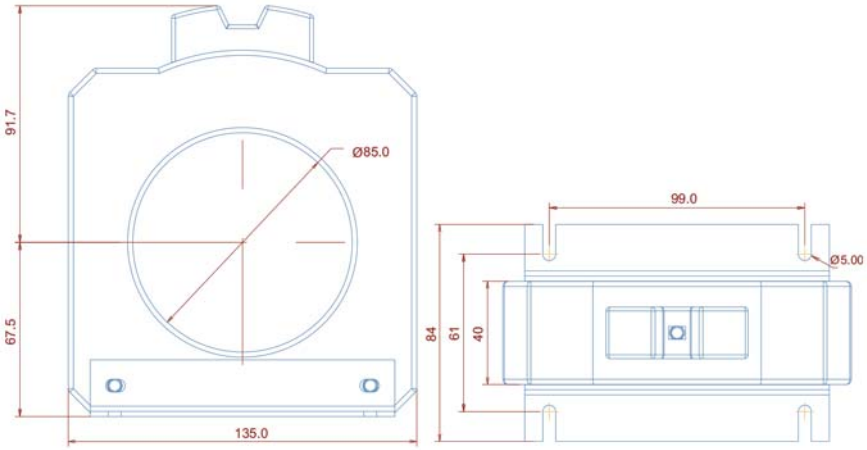


| LTRC-4 135/85(40) | | |
|---|---|---|
| Ratio | VA | Class |
| 800 | 15 | 1 |
| 1000 | 15 | 1 |
| 1200 | 15 | 1 |

**Contact**

**Sifam Tinsley Instrumentation Ltd**

1 Warner Drive
Springwood Industrial Estate
Braintree, Essex
CM7 2YW

Tel: 01376 335271
E-mail: sales@sifamtinsley.com

**www.sifamtinsley.co.uk**