sifam tinsley
PRECISION INSTRUMENTATION

MULTIFUNCTION METER
www.sifamtinsley.co.uk

DATASHEET

Issue 1.1

Multifunction Meters

Transducers & Isolators

Temperature Controllers

Converters & Recorders

Digital Panel Meters

Current Transformers

Analogue Panel Meters

Shunts

Digital Multimeters

Clamp Meters

Insulation Testers

ALPHA 30A+

Features

- MODBUS (RS485) Communication (optional)
- Pulse/Limit Switch output (optional)
- 3 Line 4 Digits ultra bright LED Display (up to 9999)
- On site Programmable CT/PT Ratios
- User selectable CT Secondary 1A/5A
- Measurement & Display of RPM, Run hours, On hours,
- Number of interruption

SUBJECT TO CHANGE WITHOUT NOTICE
This manual superseded all previous versions – please keep for future reference

Alpha 30A+

Application

ALPHA 30A+ measures important electrical parameters like AC Voltage, AC Current, Frequency, Active, Reactive, Apparent Power, Import & Export Energy & many more.

ALPHA 30A+ is a compact multifunction instrument which measures important electrical parameters in 3 phase 4 Wire and 3 phase 3 Wire Network & replaces the multiple analog panel meters.

Product Features

On site programmable PT/CT ratios	It is possible to program primary of external potential Transformer (PT), primary of external Current Transformer (CT) on site locally via front panel keys by entering into Programming mode or remotely via MODBUS (RS485)
User selectable CT Secondary 5A/1A	The secondary of external Current Transformer (CT) can be programmed on site to either 5A or 1A locally via front panel keys by entering into Programming mode or remotely via MODBUS (Rs485)
User selectable PT Secondary	The secondary of external potential Transformer (PT) can be programmed on locally via front panel keys by entering into Programming mode or remotely via MODBUS (RS485)
User selectable 3 phase 3W or 4W	User can program on site the network connection as either 3 Phase 3 Wire or 4 Wire locally via front panel keys by entering into Programming mode or remotely via MODBUS (RS485). For single phase applications, single phase version is available
Low back depth	The instrument has very low back depth (behind the panel) of 60mm
Onsite selection of Auto scroll / Fixed Screen	User can set the display in auto scrolling mode or fixed screen mode locally via front panel keys by entering into programming mode or remotely via MODBUS (RS485)
Phase reversal indication	The instrument can detect wrong phase sequence or failure of one of the input voltages and displays “phase” error message
Energy measurement (Import and Export)	Active energy (kWh), Reactive energy (kVAoh), Apparent energy (kVAh) & Ampere Hour (kAh). Any of the parameters can be freely assigned to 2 optional pulse outputs
True RMS measurement	The instrument measures distorted waveform up to 15th Harmonic
High brightness 3 line 4 digits LED display	Simultaneous display of 3 Parameters
User selectable Low Current suppression (below 30 mA)	User can suppress the readings below 30 mA in the current measurement by onsite programming if required.

Total Harmonic Distortion (THD)	The instrument can measure per phase THD of voltage and THD of current
Energy Count storage	In case of power failure, the instrument memorizes the last energy count. Every 40 sec, the instrument updates the energy counter in the nonvolatile memory
Programmable Energy format & Energy rollover count	Customer can assign the format for energy display on MODBUS (RS485) in terms of W, kW or MW. Additional to this, customer can also set a rollover count from 7 to 14 digits (for W), 7 to 12 digits (for kW) l 7 to 9 digits (for MW), after which the energy will roll back to zero. The above settings are applicable for all types of energy
Hour Run, ON Hour, Number of Interruptions	Hour run records the number of hours load is connected. ON Hour is the period for which the auxiliary supply is ON. Number of Interruptions indicates the number of times the Auxiliary Supply was interrupted
Optional MODBUS (RS485) Output	The optional ModBus output enables the instrument to transmit all the measured parameters over standard MODBUS (RS485)
User Assignable Registers for MODBUS	Customer can assign MODBUS register address as per his need for faster response time
Optional Pulse Output (1 or 2 Relay output) /Limit switch	The instrument can be programmed as Pulse output or Limit Switch
Pulse Output	The optional pulse output is a potential free, very fast acting relay contact which can be used to drive an external mechanical counter for energy measurement
Limit Switch	The instrument will trip the one or two relays if the programmed parameter exceeds the programmed High & Low Limits
Configuration of the Instrument via MODBUS only be set locally via front panel keys	The instrument settings can be configured locally via front panel keys by entering into Programming mode or remotely vis MODBUS (Rs485). Note: the MODBUS communication parameters can in the Programming mode
Min Max storage of parameters possible	The instrument stores minimum and maximum values for System Voltage and System Current. Every 40 sec minimum and maximum readings are updated.
Number of parameters measured more than 46	The instrument measures more than 46 electrical parameters of 3 Phase network
Parameter Screen recall	In case of power failure, the instrument memorizes the last displayed screen. The displayed screen will get memorized only if user keeps this screen for minimum 40 sec duration before power failure for fixed screen mode
Optional Analog Outputs (1 or 2 Outputs)	1 or 2 Analog outputs can be programmed from a list of input parameters
Ethernet Interface (Modbus TCP/IP Protocol)	The optional Ethernet Interface output transmit all the measured parameters on MODBUS TCP/IP. Also user can configure their instrument via Ethernet Interface
Enclosure Protection for dust and water	Conforms to IP 54, IP 65(optional) (front face) as per IEC60529
Compliance to International Safety standards	Compliance to International Safety standard IEC 61010-1-2010
EMC Compatibility	Compliance to International standard IEC 61326

Technical Specifications

Reference conditions for Accuracy	
Reference temperature	23°C +/- 2°C
Input waveform	Sinusoidal (distortion factor 0.005)
Input frequency	50 or 60 Hz ±2%
Auxiliary supply voltage	Rated Value ±1%
Auxiliary supply frequency	Rated Value ±1%
Voltage Range	50... 100% of Nominal Value. 60... 100% of Nominal Value foo THD.
Current Range	10... 100% of Nominal Value. 20... 100% of Nominal Value foo THD.
Power	Cos phi / sin phi = 1 for Active/ Reactive Power I Energy. 10... 100% of Nominal Current & 50... 100% of Nominal Voltage.
Power Factor / Phase Angle	40... 100% of Nominal Current & 50... 100% of Nominal Voltage.

Applicable Standards

EMC	IEC 61326
Immunity	IEC 61000-4-3. 10V/m min – Level 3 industrial low level
Safety	IEC 61010-1-2010 , Permanently connected use
IP for water & dust	Front IP 54, Front(Optional) IP65 Back IP 20, as per IEC60529
Pollution degree	2
Installation category	III
High Voltage Test	3.7 kV AC, for 1 minute

Accuracy

Parameter	Accuracy
Voltage	± 0.5% of Nominal value
Current	± 0.5% of Nominal value
Frequency	± 0.15% of mid frequency
Active Power	± 0.5% of Nominal value
Re-Active Power	± 0.5% of Nominal value
Apparent Power	± 0.5% of Nominal value
Active energy (kWh)	± 0.5% of Nominal value
Re Active energy (kVArh)	± 0.5% of Nominal value
Apparent energy (kVAh)	± 0.5% of Nominal value
Accuracy of Analog Output	1 % of Output end value
Power Factor	±1% of Unity
Angle	±1% of range
Total Harmonic Distortion	±2%
Neutral current	±4% of range

Note- Measurement error is normally much less than the error specified in technical specification. Variation due to influence quantity is less than twice the errors allowed for reference condition.

Input Voltage

Nominal input voltage (AC RMS)	Phase –Neutral 63.5 / 133 / 239.6 / 288.6 VL-N Line-Line 110 / 230 / 415 / 500 VL-L
System PT primary values	100VLL to 692kVLL programmable on site
Max continuous input voltage	120% of rated value

Input Current

Nominal input current	5A AC RMS.
System CT secondary values	1A & 5A programmable on site
System CT primary values	From 1A up to 9999A (for 1 or 5 Amp)
Max continuous input current	120% of rated value

Auxiliary Supply	
Higher Auxiliary Supply	60V… 300 VAC DC
Higher Aux Nominal Value	230 V AC, 50/60 Hz / 230 V DC
Lower Auxiliary Supply Lower Aux Nominal Value	20…..60 V DC / 20.....40 V AC 48 V DC / 24 V AC, 50/60 Hz
Aux. supply	45 to 65 Hz
VA Burden	
Nominal input voltage burden	< 0.2 VA approx. per phase
Nominal input current burden	< 0.6 VA approx.. per phase
Auxillary Supply burden	< 5 VA for AC aux < 4 W for DC aux
Overload Withstand	
Voltage	2 x rated value for 1 second, repeated 10 times at 10 second intervals
Current	20 x rated value for 1 second, repeated 5 times at 5 min intervals
Operating Measuring Ranges	
Voltage	10… 120% of rated value
Current	5 … 120% of rated value
Frequency	40…70 Hz
Power Factor	0.5 Lag ... 1... 0.8 Lead
Influence of Variations	
Temperature coefficient	0.05%/°C for Voltage (50...120% of rated value) 0.05%/°C for Current (10...120% of rated value)
Display update rate	
Response time to step input	1 sec approx..
Ampere Hour	
Default pulse rate	CT secondary = 1A Max pulse rate 3600 pulses/Ah*
Divisor	CT secondary = 5A Max pulse rate 720 pulses/Ah
Other Pulse rate divisors (applicable only when Energy on RS485 is in W):	
10	CT secondary = 1A Max pulse rate 3600 pulses/10Ah* CT secondary = 5A Max pulse rate 720 pulses/10A
100	CT secondary = 1A Max pulse rate 3600 pulses/100Ah * CT secondary = 5A Max pulse rate 720 pulses/100Ah
1000	CT secondary = 1A Max pulse rate 3600 pulses/1000Ah* CT secondary = 5A Max pulse rate 720 pulses/1000Ah
Pulse duration	60 ms, 100 ms or 200 ms
*No. of Pulses = Maximum Pulses / CT Ratio Where, CT Ratio = (CT primary/ CT Secondary)	
PT Secondary Ranges for Various Input Voltage	
Input Voltage	PT Secondary Settable Range
110V L-L (63.5V L-N)	100V – 120V L-L (57V – 69V L-N)
230V L-L (133V L-N)	121V – 239V L-L (70V – 139V L-N)
415V L-L (239.6V L-N)	240V–480V L-L (140V – 288.6V L-N) PT secondary is settable upto 500VL-L by modbus communication
Limit Output Option	
Limit can be assigned to different measured parameters. It can be configured in one of the four modes given below.	
1) Hi alarm & Energized Relay	
2) Hi alarm & De-energized Relay	
3) Lo alarm & Energized Relay	
4) Lo alarm & De-energized Relay	

With user selectable Trip point, Hysteresis, Energizing delay and De-energizing delay.

Environmental	
Operating temperature	-20 to +70°C
Storage temperature	-30 to +80°C
Relative humidity	0... 90% non condensing
Warm up time	Minimum 3 minute
Shock	15g in 3 planes
Vibration	10... 55... 10 Hz, 0.15mm amplitude
Pulse output	
Energy (can be programmed for different energy parameters simultaneously)	
Relay contact	(1NO+1NC)
Switching Voltage I current for Relay	240 VAC ,5 A

Default pulse rate divisor			
1 per Wh (up to 3600W)		1 per kWh (up to 3600kWh)	1 per MWh (above 3600kW)
Other Pulse rate divisors (applicable only when Energy on RS485 is in W)			
10	1 per 10 Wh (up to 3600W)	1 per 10 kWh (up to 3600kWh)	1 per 10 MWh (above 3600kW)
100	1 per 100 Wh (up to 3600W)	1 per 100 kWh (up to 3600kWh)	1 per 100 MWh (above 3600kW)
1000	1 per 1000 Wh (up to 3600W)	1 per 1000 kWh (up to 3600kWh)	1 per 1000 MWh (above 3600kW)

Pulse Duration 60 ms, 100 ms, 200 ms
Above options are also applicable to Apparent and Reactive Energy.

Electrical Connections

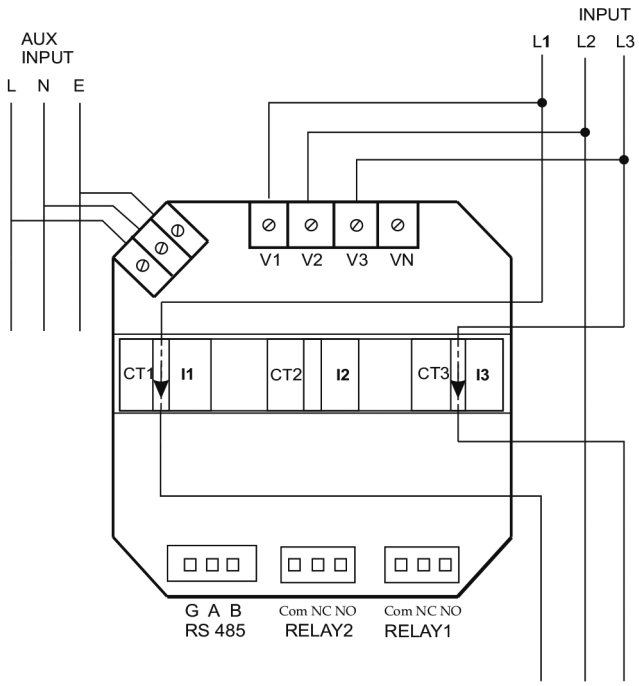

FOR 3 PHASE 3 WIRE UNBALANCED LOAD

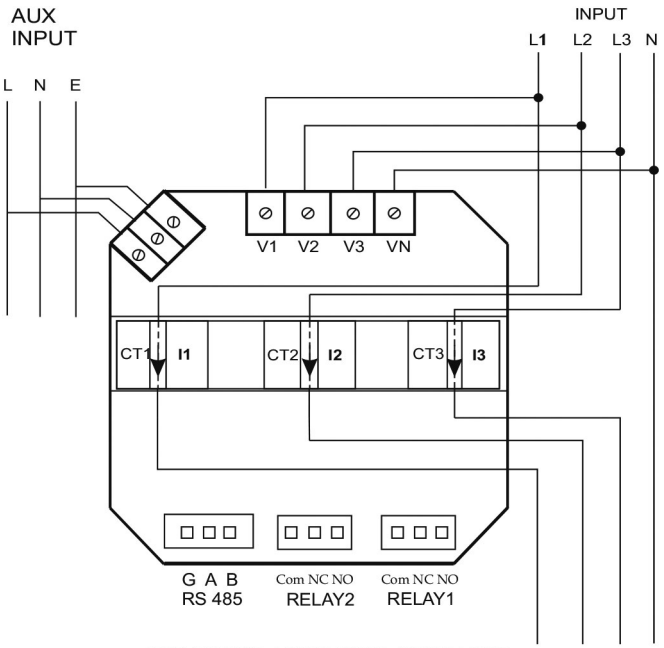

FOR 3 PHASE 4 WIRE UNBALANCED LOAD

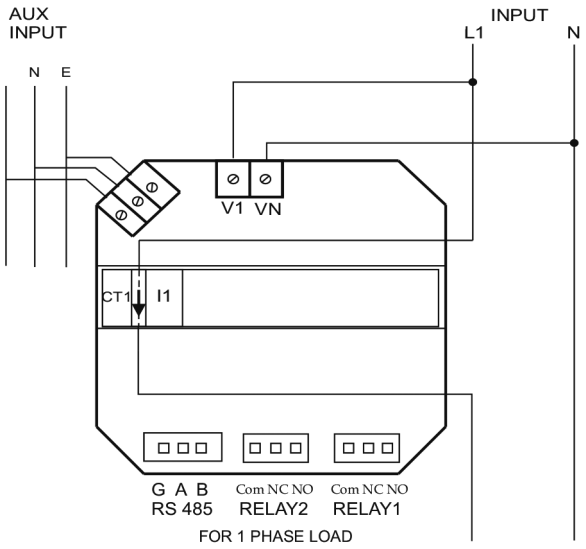

It is recommended that the wires used for connections to the instrument should have lugs soldered at the end. That is, the connections should be made with Lugged wires for secure connections. The Maximum diameter of the lug should be 7.0mm and maximum thickness 3.5mm. Permissable cross section of the connection wires <=4.0mm² single wire or 2 x 2.5mm² fine wire.

Dimension Details

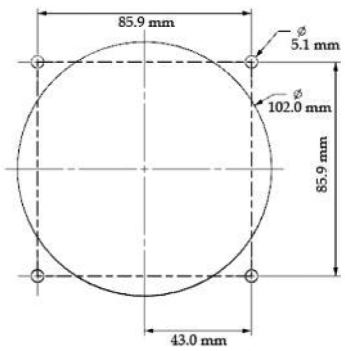

ANSI

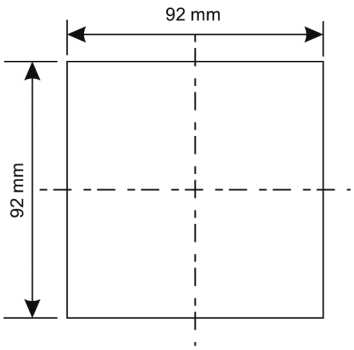

DIN

PANEL CUTOUT

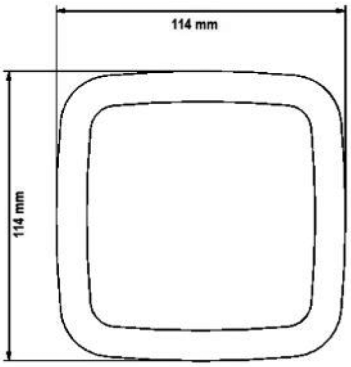

ANSI

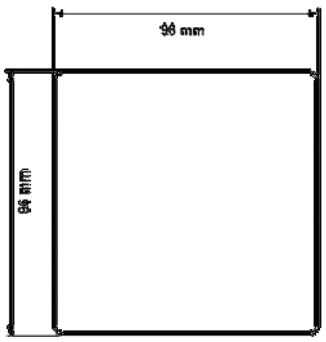

DIN

METER FRONT FACE

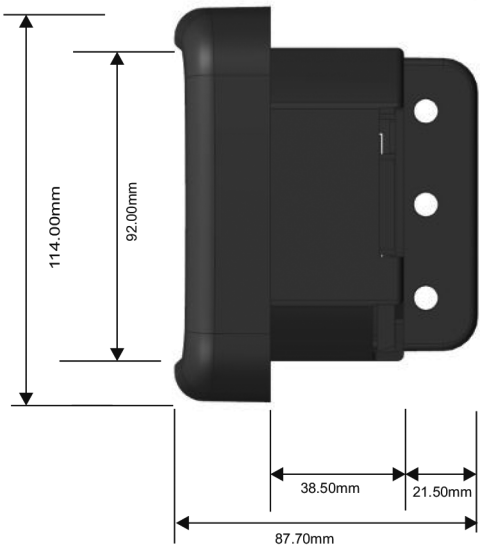

METER SIDE VIEW

Parameter Measurement and Display

Sr No	Displayed Parameters	3 Phase 4Wire	3Phase 3Wire	Single Phase 2W
1.	System Volts	✓	✓	✓
2.	System Current	✓	✓	✓
3.	Volts L1 – N	✓	×	×
4.	Volts L2 – N	✓	×	×
5.	Volts L3 – N	✓	×	×
6.	Volts L1 – L2	✓	✓	×
7.	Volts L2 – L3	✓	✓	×
8.	Volts L3 – L1	✓	✓	×
9.	Current L1	✓	✓	×
10.	Current L2	✓	✓	×
11.	Current L3	✓	✓	×
12.	Neutral Current	✓	×	×
13.	Frequency	✓	✓	✓
14.	System Active Power (kW)	✓	✓	✓
15.	Active Power L1 (kW)	✓	×	×
16.	Active Power L2 (kW)	✓	×	×
17.	Active Power L3 (kW)	✓	×	×
18.	System Re-active Power (kVAr)	✓	✓	✓
19.	Re-active Power L1 (kVAr)	✓	×	×
20.	Re-active Power L2 (kVAr)	✓	×	×
21.	Re-active Power L3 (kVAr)	✓	×	×
22.	System Apparent Power (kVA)	✓	✓	✓
23.	Apparent Power L1 (kVA)	✓	×	×
24.	Apparent Power L2 (kVA)	✓	×	×
25.	Apparent Power L3 (kVA)	✓	×	×
26.	System Power Factor	✓	✓	✓
27.	Power Factor L1	✓	×	×
28.	Power Factor L2	✓	×	×
29.	Power Factor L3	✓	×	×
30.	Phase Angle L1	✓	×	✓
31.	Phase Angle L2	✓	×	×
32.	Phase Angle L3	✓	×	×
33.	Import kWh (8 digit resolution)	✓	✓	✓
34.	Export kWh (8 digit resolution)	✓	✓	✓
35.	Import kVArh (8 digit resolution)	✓	✓	✓
36.	Export kVArh (8 digit resolution)	✓	✓	✓
37.	kVAh (8 digit resolution)	✓	✓	✓
38.	KAh (8 digit resolution)	✓	✓	✓
39.	Current Demand	✓	✓	✓
40.	KVA Demand	✓	✓	✓
41.	KW Import Demand	✓	✓	✓
42.	KW Export Demand	✓	✓	✓
43.	Max Current Demand	✓	✓	✓
44.	Max KVA Demand	✓	✓	✓
45.	Max KW Import Demand	✓	✓	✓
46.	Max KW Export Demand	✓	✓	✓
47.	Run Hour	✓	✓	✓
48.	On Hour	✓	✓	✓
49.	Number of Interruptions	✓	✓	✓
50.	Phase Reversal Indication	✓	✓	✓
51.	THD Volts L1-N	✓	×	×
52.	THD Volts L2-N	✓	×	×
53.	THD Volts L3-N	✓	×	×
54.	THD Volts L1-L2	×	✓	×

✓- Available × - Not available

Sr No	Displayed Parameters	3 Phase 4Wire	3Phase 3Wire	Single Phase 2W
55.	THD Volts L2-L3	×	✓	×
56.	THD Volts L3-L1	×	✓	×
57.	THD Current L1	✓	✓	×
58.	THD Current L2	✓	✓	×
59.	THD Current L3	✓	✓	×
60.	THD Voltage Mean	✓	✓	✓
61.	THD Current Mean	✓	✓	✓

✓- Available × - Not available

Ordering Information

Product Code	ALPHA 30A+	X	X	X	X	X	X	000000
System Type	3 Phase	3						
	1 Phase	1						
Input Voltage / Current	115V L-N 1/5A		1					
	220V L-N 1/5A		2					
	230V L-N 1/5A		3					
	240V L-N 1/5A		4					
	100V L-L 1/5A		5					
	110V L-L 1/5A		6					
	200V L-L 1/5A		7					
	208V L-L 1/5A		8					
	230V L-L 1/5A		9					
	240V L-L 1/5A		A					
	380V L-L 1/5A		B					
	400V L-L 1/5A		C					
	415V L-L 1/5A		D					
	500V L-L 1/5A		E					
Power Supply	60-300V AC/DC, 45-65Hz			H				
	20-40Vac 45- 65 Hz or 20-60Vdc			L				
RS 485	With RS 485				R			
	Without RS 485				Z			
Pulse Output	1 Pulse output					S		
	2 Pulse output					D		
	Pulse O/P not used					Z		
Analog Output	2 outputs (0 – 1mA)						1	
	2 outputs (4 – 20 mA)						2	
	Analog Outputs option not used						Z	

Note- Impulse Output is not available in case of analog output option

Contact

Sifam Tinsley Instrumentation Ltd

1 Warner Drive
Springwood Industrial Estate
Braintree, Essex
CM7 2YW

Tel: 01376 335271
E-mail: sales@sifamtinsley.com

www.sifamtinsley.co.uk