sifam tinsley
PRECISION INSTRUMENTATION

DATASHEET Issue 2.0

Multifunction Meters

Transducers & Isolators

Temperature Controllers

Converters & Recorders

Digital Panel Meters

Current Transformers

Analogue Panel Meters

Shunts

Digital Multimeters

Clamp Meters

Insulation Testers

ALPHA 10 MULTIFUNCTION METER (ALPHA SERIES)

SUBJECT TO CHANGE WITHOUT NOTICE
This datasheet superseded all previous versions – please keep for future reference

Alpha Series

Features

- Fast & Easy Installation on panel with self clicking
- True RMS measurement
- Limit Switch (optional). (Available only in 3 Line Display)
- 3 Line 4 Digits ultra bright LED Display (up to 9999)
- On site Programmable CT/PT Ratios
- User selectable CT Secondary 1A/5A
- User selectable PT Secondary from 100 VLL to 500 VLL
- User selectable 3ph3wire / 3ph4wire / single phase Network
- Wide auxillary Power Supply which can accept any input between 40V – 300V AC/DC or 12V – 48V DC
- Storage of MIN / MAX values
- Measurement & Display of RPM, Run hours, On hours & No. of Interrupts
- Load Manager for indicating percentage of system current. (available in single line only)

Application

Alpha 10 measures important electrical parameters in 3 phase 4 Wire and 3 phase 3 Wire Network & replaces the multiple analog panel meters. It measures electrical parameters like AC Voltage, AC Current, Frequency & many more.

Product Features

On site programmable PT/CT ratios
It is possible to program primary of external potential Transformer (PT), primary of external Current Transformer (CT) on site via front panel keys by entering into Programming mode.

User selectable CT Secondary 5A/1A
The secondary of external Current Transformer (CT) can be programmed on site to either 5A or 1A using front panel keys.

User selectable PT Secondary
The secondary of external Potential Transformer (PT) can be programmed on site from 100VLL to 500VLL using front panel keys.

User selectable 3 phase 3Wire or 4Wire or Single phase Network
User can program on site the network connection as either 3 Phase 3 Wire or 4 Wire or single phase network using front panel keys.

In case of self powered Rish Delta only either 3 Phase 4 wire or single phase network are available.

Storage of parameters possible
The instrument stores minimum and maximum values for System Voltage, System Current, Run Hour, ON Hour & number of Interrupts. Every 60 sec stored values are updated.

Four function keys
Using the four function key, it is possible to go desired parameter screen instantly.

Onsite selection of Auto scroll / Fixed Screen
User can set the display in auto scrolling mode or fixed screen mode using front panel keys.

Low back depth
The instrument has very low back depth (behind the panel) of less than 55mm (without output options).

True RMS measurement
The instrument measures distorted waveform up to 15th Harmonic.

RPM Measurement
The instrument display Rotation per minutes for generator applications. Number of poles can be set on site depending upon application requirement.

Optional Limit switch (Relay)
The instrument will trip the relay if the programmed parameter exceeds the programmed Trip Limits.

3 line 4 digits LED display
Simultaneous display of 3 Parameters.

Enclosure Protection for dust and water
Conforms to IP 50 (for front face) & IP 20 (for back) & as per IEC60529.

3. Technical Specifications

Reference conditions for Accuracy	
Reference temperature	23°C +/- 2°C
Input waveform	Sinusoidal (distortion factor 0.005)
Input frequency	50 or 60 Hz ±2%
Auxiliary supply voltage	Rated Value ±1%
Auxiliary supply frequency	Rated Value ±1%
Accuracy	
Voltage	±1% of range (20... 100% of Nominal value)
Current	±1% of range (10... 100% of Nominal value)
Frequency	0.5% of mid frequency
Input Voltage	
Nominal input voltage (AC RMS)	Phase –Neutral 290V L-N , Line-Line 500V L-L
Max continuous input voltage	120% of rated value
Nominal input voltage burden	< 0.3 VA approx. per phase (For external auxiliary meter)
System PT secondary values	100VLL to 500VLL programmable on site.
System PT primary values	100VLL to 692kVLL programmable on site.
Input Current	
Nominal input current	5A AC RMS
System CT secondary values	1A & 5A programmable on site
System CT primary values	From 1A up to 9999A (for 1 or 5 Amp)
Max continuous input current	120% of rated value
Nominal input current burden	< 0.2 VA approx. per phase
Auxiliary Supply	
External Aux	40 V – 300V AC-DC (± 5 %)
Self powered	Input voltage range from 80% to 100% of Rated value. (Self powered meter is available only in 3Phase 4 Wire and Single Phase network.) Auxiliary input is derived from Phase 1 (R phase)
Frequency range	45 to 65 Hz
VA burden	3 VA Approx.

4. Dimension Details

With optional Limit switch

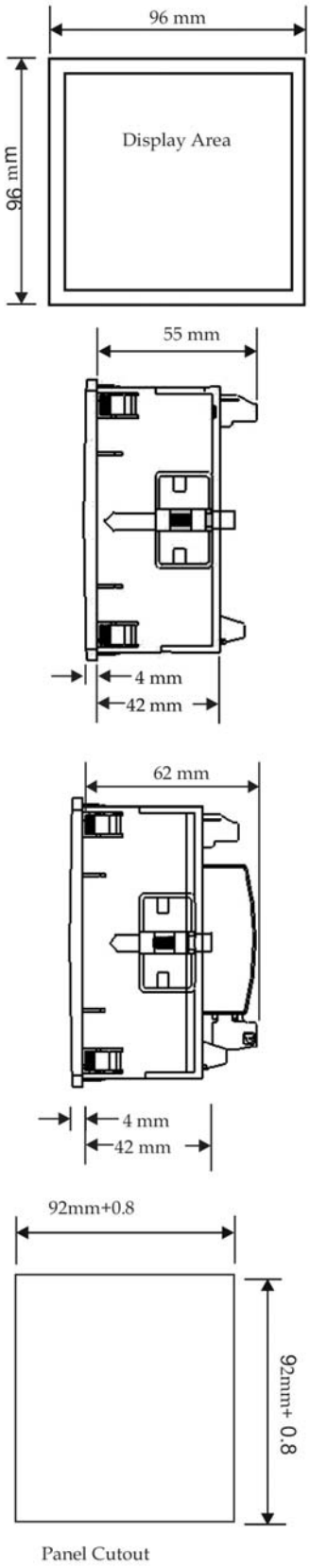

Technical Specifications Continued

Overload Withstand	
Voltage	2 x rated value for 1 second, repeated 10 times at 10 second intervals
Current	20x rated value for 1 second, repeated 5 times at 5 min intervals
Operating Measuring Ranges	
Voltage Range With External Aux	10... 120% of rated value
Voltage Range With Self Power	80... 120% of rated value
Current Range	10 ... 120% of rated value
Frequency	45...65 Hz
Influence of Variations	
Temperature coefficient	0.025%/°C for Voltage 0.05%/°C for Current
Limit Switch (Relay)	
Switching Voltage & Current for Relay	240 VDC ,5 A (1NO+1NC)
Enclosure	
Front	IP 50
Front with seal (Option)	IP 65
Back	IP 20
Environmental	
Operating temperature	-20° to +70°C
Storage temperature	-30°C to +80°C
Relative humidity	0 to 95% non condensing
Warm up time	Minimum 3 minute
Shock	15g in 3 planes
Vibration	10... 55 Hz, 0.15mm amplitude
Safety	
Pollution degree	2
Installation category	III
High Voltage Test	3.3 kV AC, 50Hz for 1 minute between Aux. and measuring inputs
Applicable Standards	
EMC	IEC 61326-1: 2005
Safety	IEC 61010-1-2001, Permanently connected use
IP for water & dust	IEC60529

5. Installation

Easy Clip in Installation on Panel

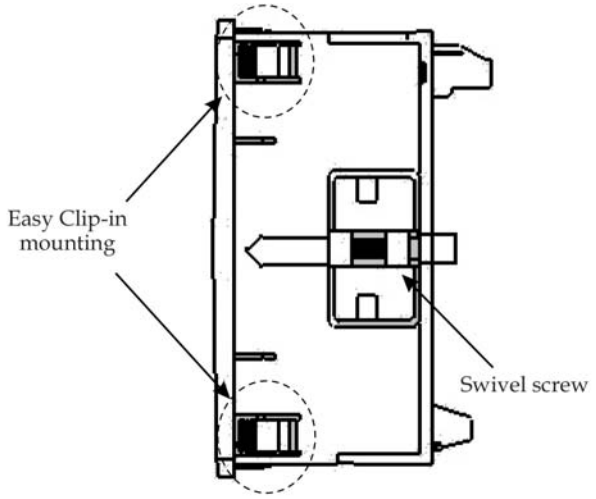

Panel Thickness : 1 - 3 mm for self clicking,
1 – 6 mm for swivel screws.

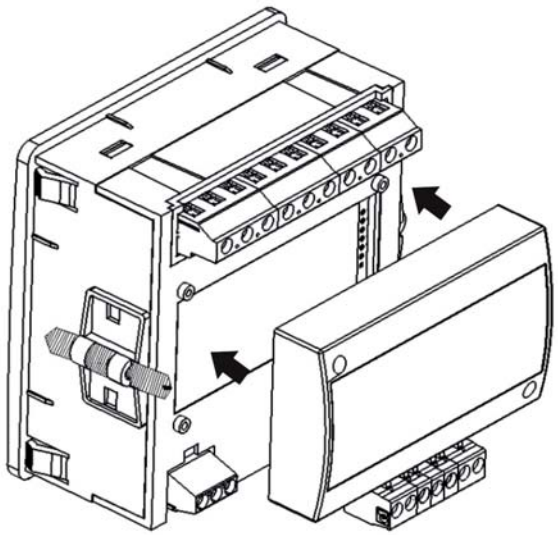

Optional Limit Switch pluggable module.

Technical Specifications Continued

Dimensions and Weight	
Bezel size	96 mm x 96 mm DIN 43 718.
Panel cut-out	92 +0.8 mm x 92 + 0.8 mm.
Overall depth	55 mm (without output options) 62 mm (with output options).
Panel Thickness	1 - 3 mm for self clicking, 1 – 6 mm for swivel screws.
Weight	320 gm. Approx (with output options).

6. Rear Connection

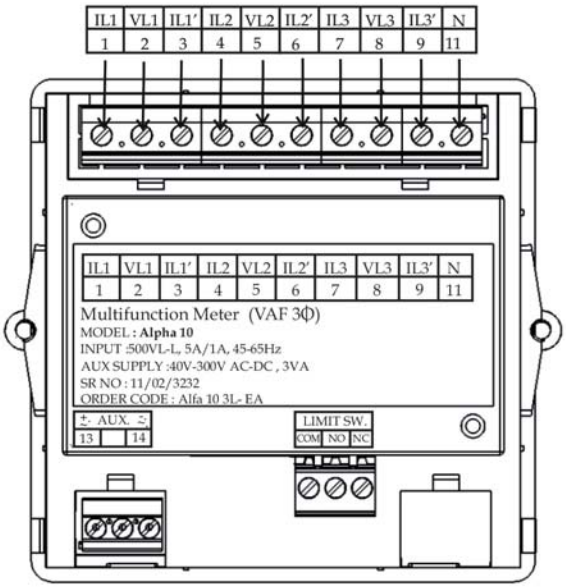

7. Electrical Connections

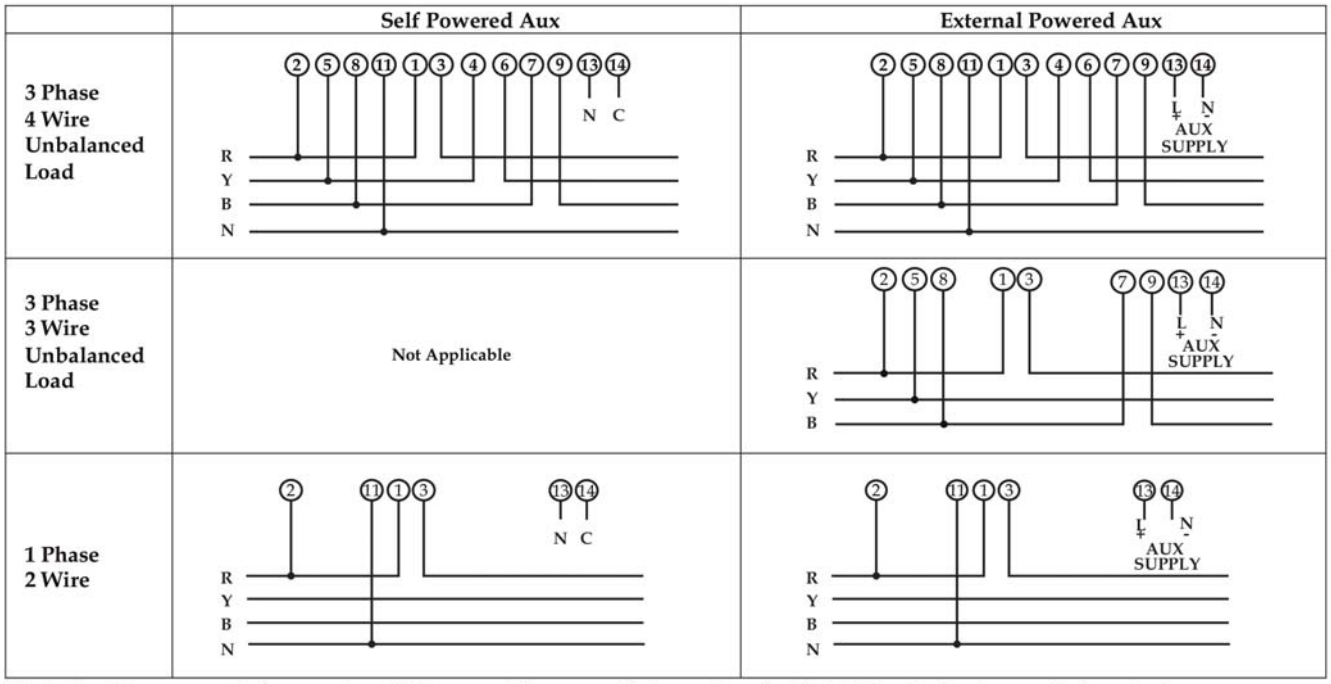

*Note: For Measurement of parameters, Voltage must be present between terminal 2 & 11 for single phase or 3 phase 4 wire network and between terminal 2 & 5 or 2 & 8 for 3 phase 3 wire network.

8. Electical Parameters

Sr No	Parameter	3 Phase 4 Wire	3 Phase 3 Wire	1 Phase 2 Wire
1	System Volts	✓	✓	✓
2	System Current	✓	✓	✓
3	Frequency	✓	✓	✓
4	Volts R–N	✓	×	✓
5	Volts Y–N	✓	×	×
6	Volts B–N	✓	×	×
7	Volts R-Y	✓	✓	×
8	Volts Y–B	✓	✓	×
9	Volts B–R	✓	✓	×
10	Current R	✓	✓	✓
11	Current Y	✓	✓	×
12	Current B	✓	✓	×
13	RPM	✓	✓	✓
14	Max (System Voltage / System Current)	✓	✓	✓
15	Min (System Voltage / System Current)	✓	✓	✓
16	Hour Run	✓	✓	✓
17	ON Hour	✓	✓	✓
18	Number of auxiliary interrupt	✓	✓	✓

9. Ordering Information

Product Code	AP10-	X	X	XX	X	X	0000000
Display Type	3 Line	3					
	1 Line (20mm display)	1					
Input Voltage / Current	100 TO 500VL-L 1/5A		1				
Power Supply	*Self Aux			SA			
	40 V – 300V AC-DC			EA			
System Type	3 Ph. (PR. 3W or 4W)				3		
	1 Ph.				1		
	3Ph. 4W				4		
Limit switch	* With Limit switch					L	
	Without Limit switch					Z	

Contact

Sifam Tinsley Instrumentation Ltd

1 Warner Drive
Springwood Industrial Estate
Braintree, Essex
CM7 2YW

Tel: 01376 335271
E-mail: sales@sifamtinsley.com

www.sifamtinsley.co.uk