sifam tinsley
PRECISION INSTRUMENTATION

DATASHEET Issue 1.0

AP25-3CO Panel Adaption Kit for DIN Rail Power Meter

NEW PRODUCT

Features

- Cost effective solution for Panel Mounted MID Approved Multifunction Meter
- Fits within a 92mm² cutout
- Detachable fascia to access Screw terminals from the front
- Quick Installation

NEW PRODUCT

AP25-3CO Panel Adaption Kit

This Panel Kit has been engineered to work with the following models from the Sifam Tinsley range:

- AP25-3CO
- AP25-3DO

We have manufactured this as a cost effective solution for a MID approved multifunction panel-mounted meter.

This cradle has been designed for a quick & easy installation as opposed to similar products available.

SUBJECT TO CHANGE WITHOUT NOTICE
This manual superseded all previous versions – please keep for future reference

Specification

The AP25-3CO Panel Kit provides a solution to a MID approved multifunction meter. This Panel Kit works in comparison with the SMARTRAIL-X835- MID Power Meter which comes as a Dinrail mounted meter. The Panel Kit acts as a cradle which holds the Dinrail meter securely in place, the fascia of the Panel Kit creates a 96mm² fascia. The AP25-3CO Panel Kit consists of two separate components making it practical, fast and easy to install.

When installing the AP25-3CO meter using the Panel Kit, you will notice clips on either side, this is so that once the Panel Kit is pushed into the 92mm² cut out, the clips hold the cradle in place securely.

The reason for the separate front plate is so that when the meter is held securely within the cradle, the terminal screws are still accessable at the front of the meter without having to remove it from the Panel Kit. This allows for an easier wiring solution for setup and any adjustments.

Once the meter has been wired in place, the front plate can be clipped on, allowing the screen of the meter to be visible within the 96mm² square panel enclosure. Due to the AP25-3CO meter featuring touchscreen buttons, the user can cycle through all parameter options whilst the meter is secured within the Panel Kit.

Dimensions

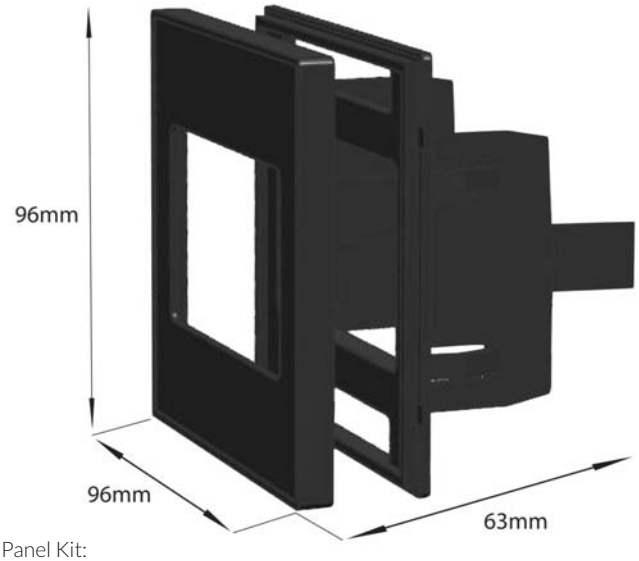

Panel Kit:
Height: 96mm
Length: 96mm
Depth: 63mm
Face Hole:
Height: 41mm
Length: 71mm

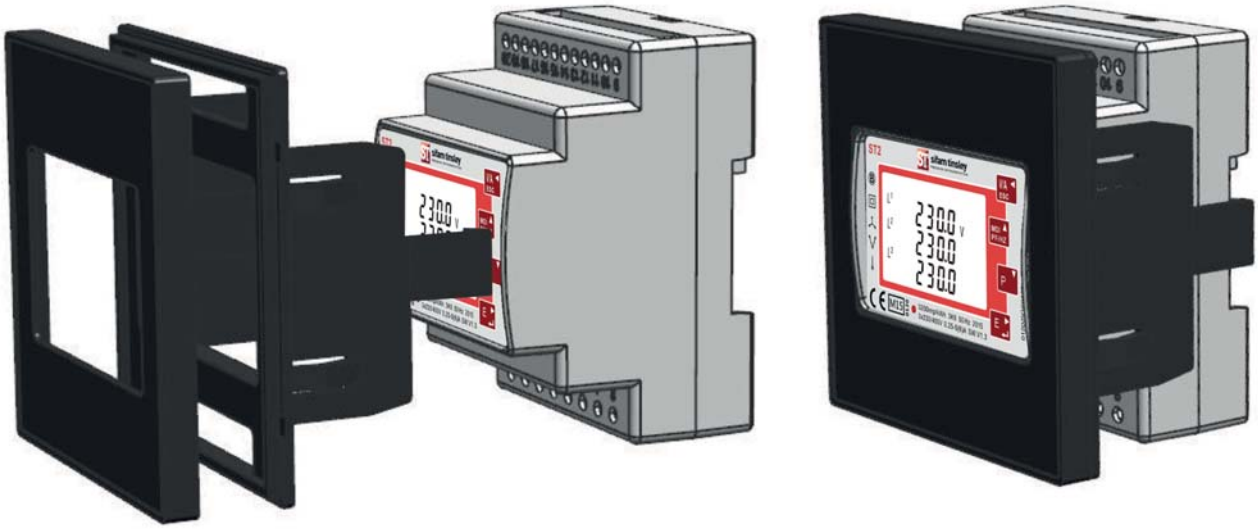

Contact

Sifam Tinsley Instrumentation Ltd

1 Warner Drive
Springwood Industrial Estate
Braintree, Essex
CM7 2YW

Tel: 01376 335271
E-mail: sales@sifamtinsley.com

www.sifamtinsley.co.uk