Quad Loads Multifunctional Energy Meter

AP15-***-RJ12

User manual V1.2

All rights reserved. Without the written permission of the company, no paragraphs or chapters in this manual can be extracted, copied or reproduced in any form. Otherwise, the violator shall bear all consequences.

The company reserves all legal rights.

The company reserves the right to amend the product specifications in this manual without prior notice. Before placing an order, please contact our company or local agent to get the latest specifications.

Content

Chapter 1. Introduction ..... - 1 -

1.1 Introduction ..... - 1 -

1.2 Product Characteristics ..... - 1 -

1.3 Application ..... - 1 -

Chapter 2. Technical Parameters ..... - 2 -

2.1Technical parameters ..... - 2 -

2.2 Accuracy ..... - 2 -

2.3 RS485 communication ..... - 2 -

2.4 Performance criteria ..... - 3 -

2.5 Dimensions ..... - 3 -

2.6 Wiring diagram ..... - 4 -

2.6.1 Three Phase 4 Wires ..... - 4 -

2.6.2 Three Phase 3 Wires ..... - 4 -

2.6.3 Single Phase 2 Wires ..... - 5 -

2.6.4 Single Phase 3 Wires ..... - 5 -

Chapter 3. Operation ..... - 6 -

3.1 Installation display ..... - 6 -

3.2 Button Function: ..... - 6 -

3.3 Measurements ..... - 7 -

3.3.1 Voltage and current ..... - 7 -

3.3.2 Frequency, Power factor and Demand ..... - 8 -

3.3.3 Power ..... - 8 -

3.3.4 Energy ..... - 9 -

3.4 Setup Mode ..... - 10 -

3.4.1 Password Validation ..... - 10 -

3.4.2 Communication Address ..... - 10 -

3.4.3 Baud rate setup ..... - 12 -

3.4.4 Parity setup ..... - 12 -

3.4.5 Stop bits setup ..... - 12 -

3.4.6 CT2 check ..... - 13 -

3.4.7 CT1 setup ..... - 13 -
3.4.8 Demand Interval Time setup ..... - 14 -
3.4.9 Backlit Power Time Setup ..... - 14 -
3.4.10 System Type Setup ..... - 14 -
3.4.11 Password Modification Setup ..... - 15 -
3.4.12 CT Reverse Connect Correction ..... - 15 -
3.4.13 Reset ..... - 16 -
Chapter 4. Communication ..... - 16 -
4.1 RS485 Bus Connection ..... - 16 -
4.1.1 Internal Pinout for Communication RS485 Port ..... - 16 -
4.1.2 Connection Diagram for Communication ..... - 17 -
4.2 Protocol of Single Communication Address Mode ..... - 17 -
4.2.1 Input Registers, Function code (Hex): 04 ..... - 17 -
4.2.2 Holding Register, Function code (Hex): 03(read) / 10(write) ..... - 20 -
4.3 Protocol of Multi Communication Addresses Mode ..... - 24 -
4.3.1 Input Register, Function code (Hex): 04 ..... - 24 -
4.3.2Holding Register， Function code (Hex) : 03(reade) / 10(write) ..... - 27 -
4.4 Example ..... - 30 -

Chapter 1. Introduction

1.1 Introduction

AP15-***-RJ12 is a new multifunction energy meter designed by Sifam Tinsley for multi channel measurements. The meter can work with 1p2w, 1p3w, 3p3w and 3p4w electricity grid, and it provides all important electrical parameters: voltage, current, power, PF, THD, frequency, demand, energy etc. By using plug-in connectors, the meter provides an easy click solution saving 80% installation time and avoiding wiring mistakes.

The AP15-***-RJ12 is compactly designed. It can be used as 4x three phase energy meters or 12x single phase energy meters. 100mA secondary external CT is required to work with the meter.

The meter is equipped with a RS485 communication port by using 2x RJ45 connectors. Modbus RTU protocol is adopted for remote reading and programming. The meter has a big backlit LCD showing data and uses 4 touch buttons in front for data checking and programming.

1.2 Product Characteristics

- ★ 100mA CT connected
- ★ Multi-parameters measurement
- ★ Plug-in solution
- ★ LCD with white backlit, adjustable backlit time
- ★ Quad load measurement

Measurements:

- ★ Phase voltage: V1, V2, V3
- ★ Line voltage: V1-2, V2-3, V3-1
- ★ Current: I1, I2, I3
- ★ Active power: P1, P2, P3, P_total (total active power)
- ★ Reactive power: Q1, Q2, Q3, Q_total (total reactive power)
- ★ Apparent power: S1, S2, S3, S_Total (total apparent power)
- ★ Frequency: Hz
- ★ Power factor: PF
- ★ Active energy: Ep_imp (import active energy), Ep_exp (export active energy), Ep_total (total active energy)
- ★ Reactive energy: Eq_imp (import reactive energy), Eq_exp (export reactive energy), Eq_total (total reactive energy)
- ★ THD-I and THD-U
- ★ Maximum demand: MD
- ★ Max./Min. value: Max/Min

Setup:

- ★ RS485 Modbus
- ★ CT1 value
- ★ CT reverse connection
- ★ Demand Interval Time
- ★ Backlit time
- ★ Supply system 1p2w, 1p3w,3p3w,3p4w
- ★ Reset
- ★ Password modification

1.3 Application

AP15-***-RJ12 is suitable for scenarios where multi-loads are required.

Chapter 2. Technical Parameters

2.1 Technical parameters

- Voltage AC (Un): 3*230/400VAC

  Voltage range: 50 - 600VAC

  Auxiliary power supply: 85 - 300VAC

- Current input:
  Primary current input: 1 - 9999A
  Secondary current input: 100mA Overcurrent withstand: 20Imax for 0.5s

- Frequency:
  Rated value: 50/60Hz，
  Range: 45 - 65Hz

- Voltage withstand:
  AC voltage withstand: 4KV/1min
  Impulse voltage withstands: 6kV – 1.2µS waveform

- Power consumption: ≤ 2W/10VA
- Display: LCD with white backlit
- Max. reading: 99999999 kWh/kVArh

2.2 Accuracy

- Voltage: 0.5%
- Current: 0.5%
- Frequency: 0.2%
- Power factor: 1%
- Active power: 1%
- Reactive power: 1%
- Apparent power: 1%
- Active energy: Class1
- Reactive energy: Class2

2.3 RS485 communication

- Bus type: RS485
- Protocol: Modbus RTU
- Baud rate: 2400/4800/9600(default)/19200/38400bps
- Address range: 1-247
- Max. Bus loading: 64pcs
- Communication distance: 1000m
- Parity: EVEN/ODD/NONE (default）
- Data bit: 8
- Stop bit: 1

Note: AP15-***-RJ12 has 2 modes of communication address. The modes can be set by pressing the buttons on the meter or via RS485 Modbus.

Mode 1: Single communication address mode. Under this mode, the register address of different channels (CH01-CH04) will be showed in segments. Channel 1(CH01) will be matched to 0~2999; Channel 2(CH02) 3000~5999; Channel 3(CH03) 6000~8999, and Channel 4(CH04) 9000~11999.

Mode 2: Multi communication addresses mode. Under this mode, each meter will have 4 different Modbus addresses. Each channel (CH01-CH04) matches to one Modbus address and all the channels share the same registers. The measurement data will be distinguished by different Modbus addresses. Therefore, each AP15-***-RJ12 can be used as 4 normal meters.
Please check the protocol for detailed explanation of register codes.

2.4 Performance criteria

- Operation humidity: ≤90%
- Storage humidity: ≤95%
- Operating temperature: -25℃~+55℃
- Storage temperature: -40℃~+70℃
- International standard：GB-T 17215/ IEC62053-21/ EN50470-1/3
- Accuracy class: Class 1
- Installation category: CATIII
- Protection against penetration of dust and water: IP51 (indoor)
- Insulating encased meter of protective class: II
- Altitude: ≤2000m

2.5 Dimensions

Front View:

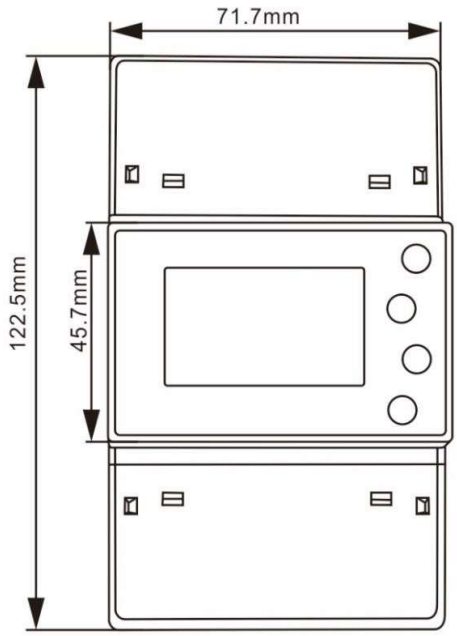

Side View:

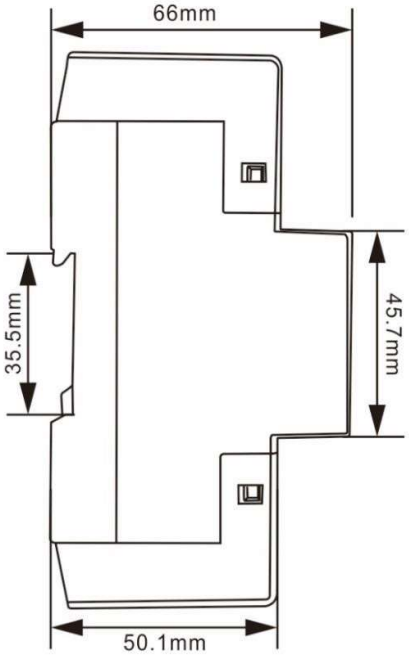

2.6 Wiring diagram

2.6.1 Three Phase 4 Wires

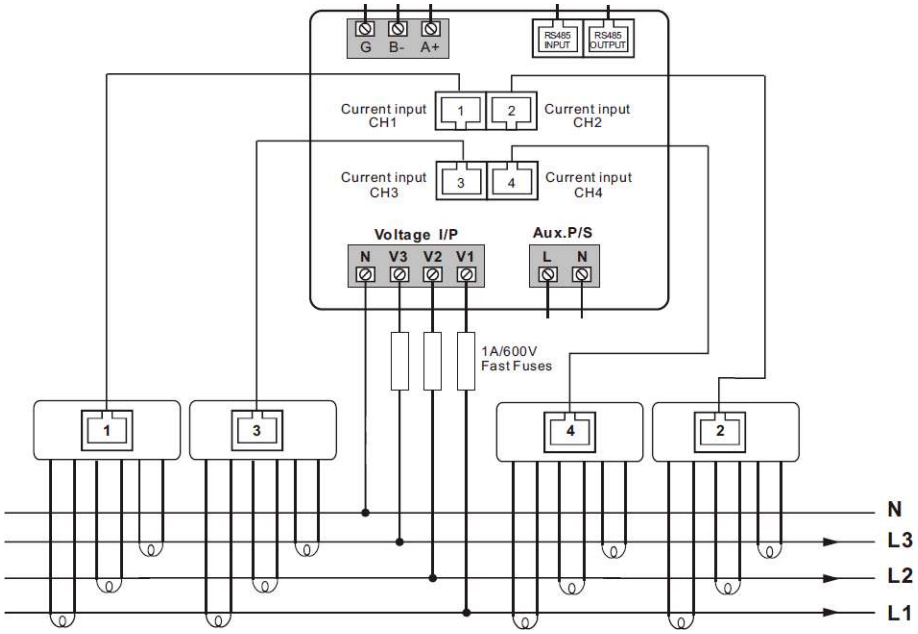

2.6.2 Three Phase 3 Wires

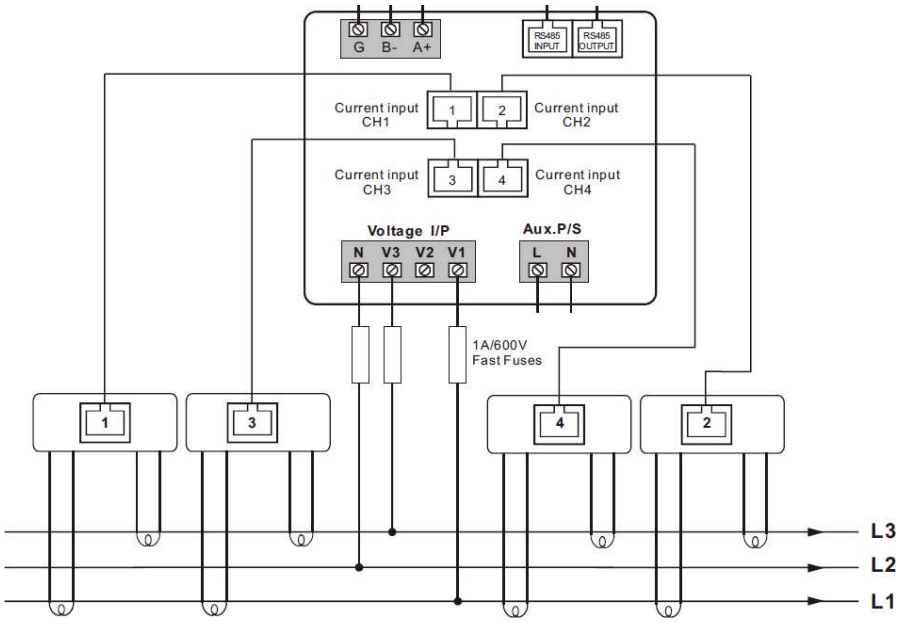

2.6.3 Single Phase 2 Wires

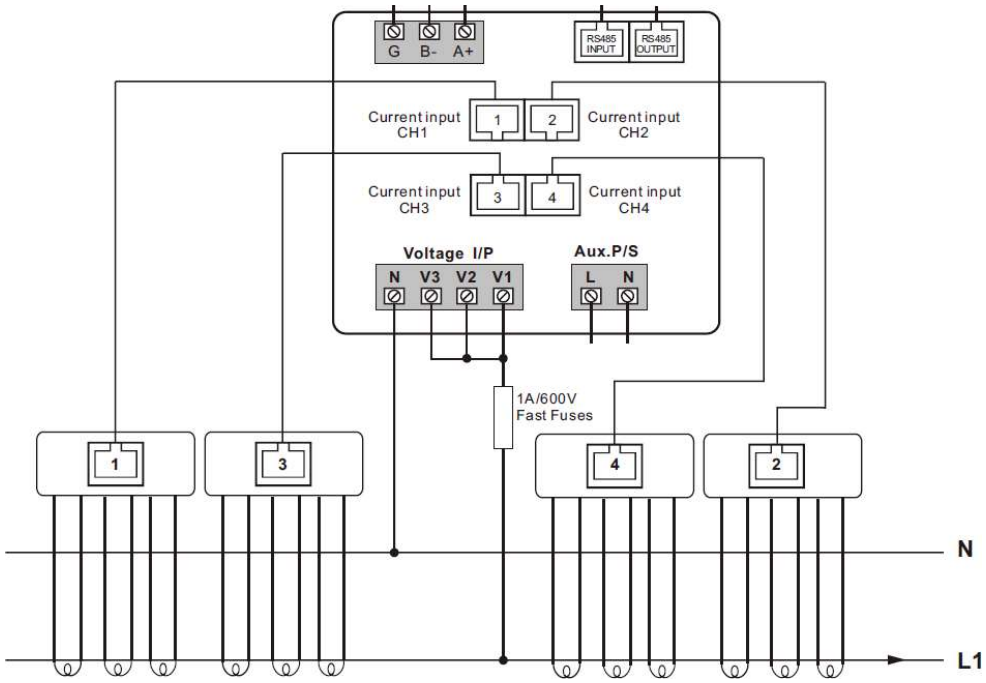

2.6.4 Single Phase 3 Wires

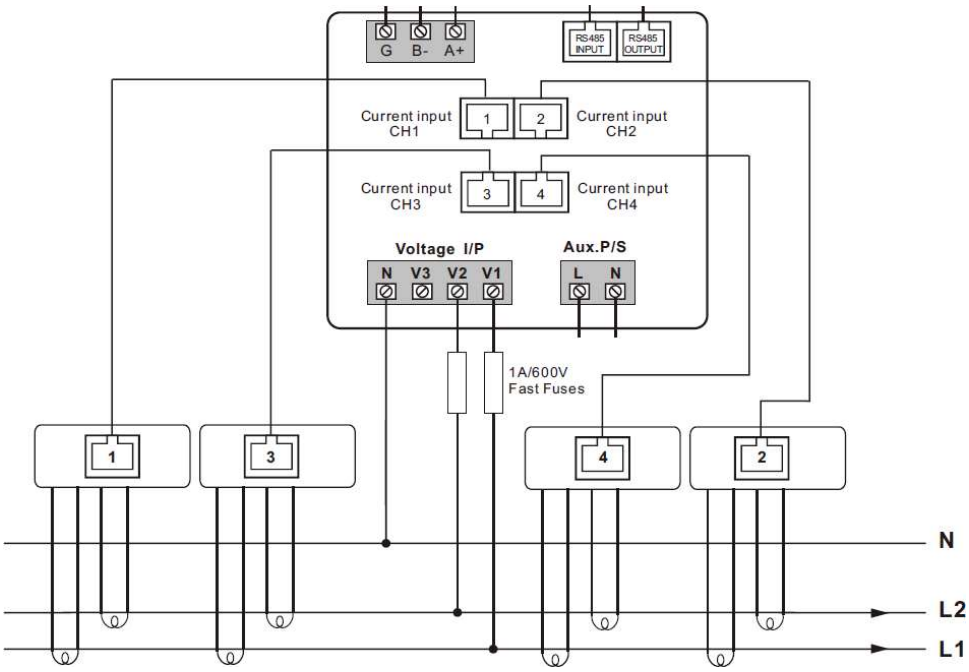

Chapter 3. Operation

3.1 Installation display

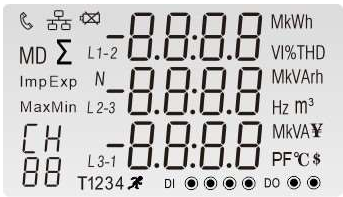	The first screen lights up all display segments and can be used as a display check.
	The second screen indicates the firmware installed in the unit. Note the actual display might be different with the left on here.
	the interfaces performs a self-test and indicates the result if the test passes.

3.2 Button Function:

Button	Short click		Long press (3s)	
	Display mode	Setup mode	Display mode	Setup mode
	V1 V2 V3 V1-2 V2-3 V3-1 I1 I2 I3 In V %THD I %THD	Return to previous menu		
	Hz PF PF1 PF2 PF3 MD of I1 I2 I3 MD of Power	Previous page or increase value	Check meter information (Address, Baud rate, Parity, CT1, SWV, Full Screen)	
	P1 P2 P3 Q1 Q2 Q3 S1 S2 S3 P-t Q-t S-t	Next page or decrease value	Change Channel (CH01~CH04)	
	Active E-t Reactive E-t Imp Active E Exp Active E Imp Reactive E Exp Reactive E	Move to right side	Get into Setup mode	Confirm setting

3.3 Measurements

3.3.1 Voltage and current

Each successive pressing of the

button selects a new range:

	Phase to neutral voltage
	Phase to phase voltage
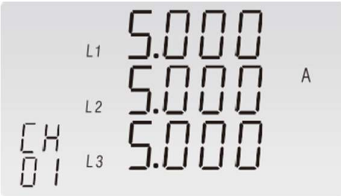	Current on each phase
	Current on neutral
	Phase to neutral voltage THD%
	Phase to neutral current THD%

3.3.2 Frequency, Power factor and Demand

Each successive pressing of the M button selects a new range:

	Frequency and Power Factor (total)
	Power Factor of each phase
	Maximum current demand on each phase
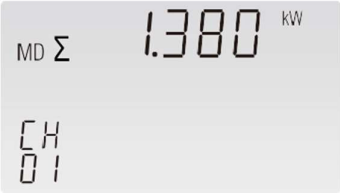	Maximum total power demand

3.3.3 Power

Each successive pressing of the P button selects a new range:

	Instantaneous Active Power in kW

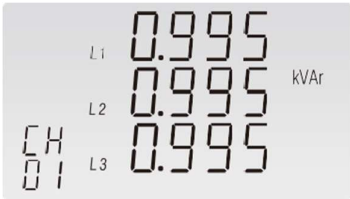	Instantaneous Reactive Power in kVAr
	Instantaneous Volt-amps in KVA
	Total kW, kVArh, kVA

3.3.4 Energy

Each successive pressing of the button shows following measurements:

	Total active energy in kWh
	Total reactive energy in kVArh
	imported active energy in kWh

	Exported active energy in kWh
	Imported reactive energy in kVArh
	Exported reactive energy in kVArh

3.4 Setup Mode

The meter's settable parameters are password protected. By long pressing the 4th button "E", the user can get into the setup mode.

3.4.1 Password Validation	
	Press button M and P to enter password. Long press button E for password confirmation. If an incorrect password is entered, the display will show "Err". If the password is correct, the unit will show the setup menu. Password: default 1000
3.4.2 Communication Address	
	Communication address setup Long press E to enter the setup
3.4.2.1 Communication address modes(quantity) setup interface The meter has two communication address modes: 1. Single communication address: there is only 1 address for the whole meter, and all channels use the same communication address.	

2. Multi communication addresses. There are 4 or 3 or 2 different communication address for different channels.	
	Communication address mode setup interface Long press to enter the interface.
	Press and to setup communication address. Long press to confirm. Option：1, M* (default) **1 means one communication address mode.** **M* means multi communication addresses. It can be 2 or 3 or 4. It depends on the meter you have is for dual loads, or tri-loads or qual loads.**
3.4.2.2-1 Address setup， range 001~247（one communication address mode）	
	Communication address setup Long press button to enter the setup mode.
	Press button and to set the addresses. Long press button to confirm. Address range：001 ~ 247, default 001.
3.4.2.2-2 Address setup, range 001~247（Multi communication addresses mode）	
	Address setup for corresponding channel Long press button to enter the setup mode. Press button and to choose the channel (CH01-CH04) that need setting.

SEt AddR CH 001 01	Press button M and P to set the address. Long press E to confirm. Address range：001 ~ 247, default 001
3.4.3 Baud rate setup	
SEt bAUd 9.6 k	Long press button E to enter the setup mode.
SEt bAUd 9.6 k	Press button M and P to set the baud rate. Long press E to confirm. Option: 2400, 4800, 9600(default), 19200, 38400 bps
3.4.4 Parity setup	
SEt PARI nONE	Long press button E to enter the setup mode.
SEt PARI nONE	Press button M and P to set the parity. Long press button E to confirm. Option: NONE (default), EVEN, ODD
3.4.5 Stop bits setup	
SEt StOP 1	Long press button E to enter the setup mode.

	Press button M and P to set the stop bits. Long press button E to confirm. Option:1(default), 2 Only when the parity is set to NONE, the stop bits can be 2.
3.4.6 CT2 check	
	Check only, not settable. Unit is 100mA input version, the CT2 check will show 0.1A.
3.4.7 CT1 setup	
	Long press button E to enter the setup.
	Press button M and P to choose the right channel (CH01-CH04). Long press button E to enter the setup interface of CT1 of each phase.
	Choose the phase to be set Press button M and P to choose the phase（L1, L2, L3） Long press E to enter the CT1 setup interface
	CT1 setup interface Press button M and P to set the CT1 value. Long press E to confirm. CT1 range：1~9999 A, default 100 A

3.4.8 Demand Interval Time setup	
SEt dIt 60	Long press button E to enter the setup.
SEt dIt 60	Press button M and P to set the demand period value. Long press button E to confirm. Option: 5, 8, 10, 15, 20, 30, 60(default) minutes.
3.4.9 Backlit Power Time Setup	
SEt LP 60	Long press button E to enter the setup.
SEt LP 60	Press button M and P to set the value. Long press button E to confirm. Option: ON, OFF, 5, 10, 30, 60(default), 120 mins ON means backlit always on, OFF means backlit always off.
3.4.10 System Type Setup	
SEt SYS 3P4	Long press button E to enter the setup.
SEt SYS 3P4	Press button M and P to setup the supply system. Option: 3P4W, 3P3W, 1P2W or 1P3W. Long press button E to confirm. Option: 3P4W(default), 3P3W, 1P2W, 1P3W.

3.4.11 Password Modification Setup

SET PASS 1000	Long press button E to enter the setup mode.
SET PASS 1000	Press button M and P to enter the new password. Long press button E to confirm. Range：0000~9999, default 1000.

3.4.12 CT Reverse Connect Correction

If the CT is reversely connected, the user does not need to disconnect and reconnect the cables. By this setting adjustment, the meter will automatically adjust the current direction.

SET SYS CNNT	Long press E to choose the channel.
SET CH CNNT 01	Channel selection Press button M and P to choose channel (CH01-CH04) Long press E to enter the phase selection interface for CT
SET L1 CH CNNT 01	Phase select the phase Press button M and P to choose the phase (L1, L2, L3). Long press button E to enter the setup.
SET L1 CH FRd 01	Press button M and P to set the direction. Long press button E to confirm. Option: FRD (forward) and REV (reverse), default: FRD.

3.4.13 Reset This function allows user to reset data.	
	Long press button E to choose channel.
	Channel Selection interface Press button M and P to choose channel (CH01-CH04). Long press E to enter the reset confirmation interface.
	Press button M and P to choose the data type. Long press button E to confirm. Reset done. Reset option: Max. demand, Max. value, Min. value
Note：	
	The left interface shows how to reset demand information.
	The left interface shows how to reset Max. and Min. values.

Chapter 4. Communication

4.1 RS485 Bus Connection

The meter provides a RS485 communication in form of RJ45 port and screw terminals.

4.1.1 Internal Pinout for Communication RS485 Port

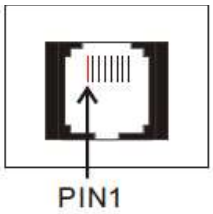

PIN	DESCRIPTION
1	—
2	—
3	—
4	—
5	—
6	A+
7	B-
8	G

4.1.2 Connection Diagram for Communication

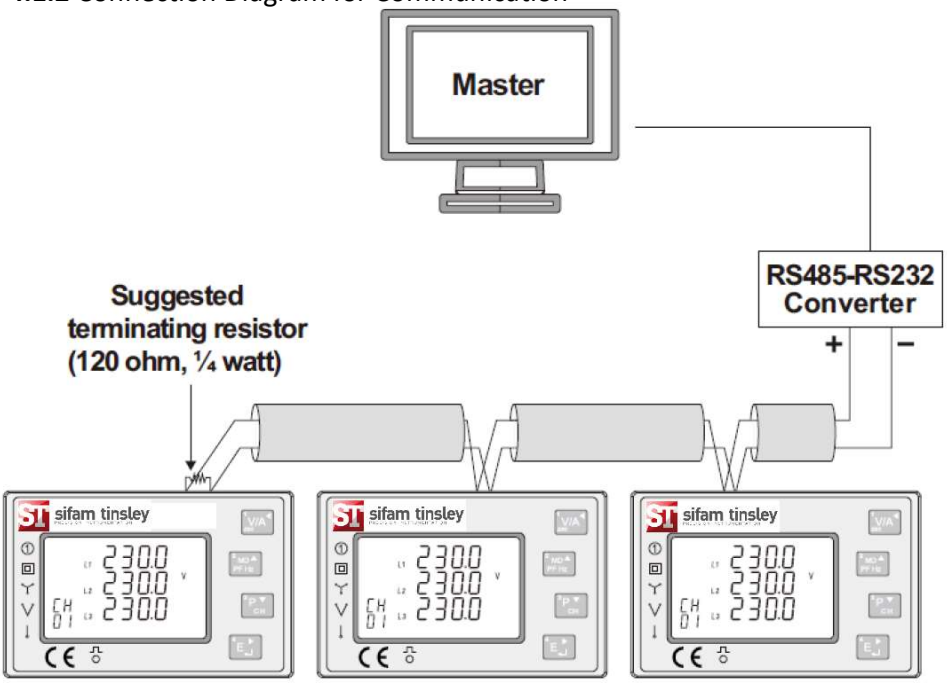

4.2 Protocol of Single Communication Address Mode

4.2.1 Input Registers, Function code (Hex): 04

Address (Register)	Input Register Parameter				Modbus Protocol Start Address Hex	
	Description	Length (bytes)	Data Format	Units	Hi Byte	Lo Byte
Below is register for CH01						
30001	Phase 1 line to neutral volts	4	Float	V	00	00
30003	Phase 2 line to neutral volts	4	Float	V	00	02
30005	Phase 3 line to neutral volts	4	Float	V	00	04

30007	Phase 1 current	4	Float	A	00	06
30009	Phase 2 current	4	Float	A	00	08
30011	Phase 3 current	4	Float	A	00	0A
30013	Phase 1 active power	4	Float	W	00	0C
30015	Phase 2 active power	4	Float	W	00	0E
30017	Phase 3 active power	4	Float	W	00	10
30019	Phase 1 apparent power	4	Float	VA	00	12
30021	Phase 2 apparent power	4	Float	VA	00	14
30023	Phase 3 apparent power	4	Float	VA	00	16
30025	Phase 1 reactive power	4	Float	VAr	00	18
30027	Phase 2 reactive power	4	Float	VAr	00	1A
30029	Phase 3 reactive power	4	Float	VAr	00	1C
30031	Phase 1 power factor (1)	4	Float	None	00	1E
30033	Phase 2 power factor (1)	4	Float	None	00	20
30035	Phase 3 power factor (1)	4	Float	None	00	22
30037	Phase 1 phase angle	4	Float	Degrees	00	24
30039	Phase 2 phase angle	4	Float	Degrees	00	26
30041	Phase 3 phase angle	4	Float	Degrees	00	28
30043	Average line to neutral volts	4	Float	V	00	2A
30047	Average line current	4	Float	A	00	2E
30049	Sum of line currents	4	Float	A	00	30
30053	Total system power	4	Float	W	00	34
30057	Total system volt amps	4	Float	VA	00	38
30061	Total system VAr	4	Float	VAr	00	3C
30063	Total system power factor (1)	4	Float	None	00	3E
30067	Total system phase angle	4	Float	Degrees	00	42
30071	Frequency of supply voltages	4	Float	Hz	00	46
30073	Total import active energy	4	Float	kWh	00	48
30075	Total export active energy	4	Float	kWH	00	4A
30077	Total import reactive energy	4	Float	kVArh	00	4C
30079	Total export reactive energy	4	Float	kVArh	00	4E
30081	Total apparent energy	4	Float	kVAh	00	50
30083	Ah	4	Float	Ah	00	52
30085	Total system power demand (2)	4	Float	W	00	54
30087	Maximum total system power demand (2)	4	Float	W	00	56
30089	Import active power demand	4	Float	W	00	58
30091	Import active power max demand	4	Float	W	00	5A
30093	Export active power demand	4	Float	W	00	5C
30095	Export active power max. demand	4	Float	W	00	5E
30101	Total system VA demand	4	Float	VA	00	64
30103	Maximum total system VA demand	4	Float	VA	00	66
30105	Neutral current demand	4	Float	Amps	00	68
30107	Maximum neutral current demand	4	Float	Amps	00	6A
30109	Total system reactive power demand (2)	4	Float	VAr	00	6C
30111	Maximum total system reactive power demand(2)	4	Float	VAr	00	6E
30201	Line 1 to Line 2 volts	4	Float	V	00	C8
30203	Line 2 to Line 3 volts	4	Float	V	00	CA
30205	Line 3 to Line 1 volts	4	Float	V	00	CC
30207	Average line to line volts	4	Float	V	00	CE
30225	Neutral current	4	Float	A	00	E0
30235	Phase 1 L/N volts THD	4	Float	%	00	EA
30237	Phase 2 L/N volts THD	4	Float	%	00	EC
30239	Phase 3 L/N volts THD	4	Float	%	00	EE
30241	Phase 1 Current THD	4	Float	%	00	F0
30243	Phase 2 Current THD	4	Float	%	00	F2
30245	Phase 3 Current THD	4	Float	%	00	F4
30249	Average line to neutral volts THD	4	Float	%	00	F8
30251	Average line current THD	4	Float	%	00	FA
30259	Phase 1 current demand	4	Float	A	01	02
30261	Phase 2 current demand	4	Float	A	01	04

30263	Phase 3 current demand	4	Float	A	01	06
30265	Maximum phase 1 current demand	4	Float	A	01	08
30267	Maximum phase 2 current demand	4	Float	A	01	0A
30269	Maximum phase 3 current demand	4	Float	A	01	0C
30335	Line 1 to line 2 volts THD	4	Float	%	01	4E
30337	Line 2 to line 3 volts THD	4	Float	%	01	50
30339	Line 3 to line 1 volts THD	4	Float	%	01	52
30341	Average line to line volts THD	4	Float	%	01	54
30343	Total active Energy (3)	4	Float	kWh	01	56
30345	Total reactive Energy (3)	4	Float	kVArh	01	58
30347	L1 import active Energy	4	Float	kWh	01	5A
30349	L2 import active Energy	4	Float	kWh	01	5C
30351	L3 import active Energy	4	Float	kWh	01	5E
30353	L1 export active Energy	4	Float	kWh	01	60
30355	L2 export active Energy	4	Float	kWh	01	62
30357	L3 export active Energy	4	Float	kWh	01	64
30359	L1 total active Energy	4	Float	kWh	01	66
30361	L2 total active Energy	4	Float	kWh	01	68
30363	L3 total active Energy	4	Float	kWh	01	6A
30365	L1 import reactive energy	4	Float	kVArh	01	6C
30367	L2 import reactive energy	4	Float	kVArh	01	6E
30369	L3 import reactive energy	4	Float	kVArh	01	70
30371	L1 export reactive energy	4	Float	kVArh	01	72
30373	L2 export reactive energy	4	Float	kVArh	01	74
30375	L3 export reactive energy	4	Float	kVArh	01	76
30377	L1 total reactive energy	4	Float	kVArh	01	78
30379	L2 total reactive energy	4	Float	kVArh	01	7A
30381	L3 total reactive energy	4	Float	kVArh	01	7C
30397	Net active energy (4) (Net=Import-export)	4	Float	kWh	01	8C
30399	Net reactive energy	4	Float	kVArh	01	8E
31409	Net L1 active energy	4	Float	kWh	05	80
31411	Net L2 active energy	4	Float	kWh	05	82
31413	Net L3 active energy	4	Float	kWh	05	84
31415	Net L1 reactive energy	4	Float	kVArh	05	86
31417	Net L2 reactive energy	4	Float	kVArh	05	88
31419	Net L3 reactive energy	4	Float	kVArh	05	8A
32649	Maximum value of total active power	4	Float	W	0A	58
32655	Maximum value of L1 active power	4	Float	W	0A	5E
32657	Maximum value of L2 active power	4	Float	W	0A	60
32659	Maximum value of L3 active power	4	Float	W	0A	62
32673	Maximum value of L1 current	4	Float	A	0A	70
32675	Maximum value of L2 current	4	Float	A	0A	72
32677	Maximum value of L3 current	4	Float	A	0A	74
32683	Maximum value of L1 L-N voltage	4	Float	V	0A	7A
32685	Maximum value of L2 L-N voltage	4	Float	V	0A	7C
32687	Maximum value of L3 L-N voltage	4	Float	V	0A	7E
32689	Maximum value of line 1 to line 2 voltage	4	Float	V	0A	80
32691	Maximum value of line 2 to line3 voltage	4	Float	V	0A	82
32693	Maximum value of line 3 to line 1 voltage	4	Float	V	0A	84
32695	Minimum value of total active power	4	Float	W	0A	86
32701	Minimum value of L1 active power	4	Float	W	0A	8C
32703	Minimum value of L2 active power	4	Float	W	0A	8E
32705	Minimum value of L3 active power	4	Float	W	0A	90
32719	Minimum value of L1 current	4	Float	A	0A	9E
32721	Minimum value of L2 current	4	Float	A	0A	A0
32723	Minimum value of L3 current	4	Float	A	0A	A2
32729	Minimum value of L1 L-N voltage	4	Float	V	0A	A8
32731	Minimum value of L2 L-N voltage	4	Float	V	0A	AA
32733	Minimum value of L3 L-N voltage	4	Float	V	0A	AC
32735	Minimum value of L1 to L2 voltage	4	Float	V	0A	AE
32737	Minimum value of L2 to L3 voltage	4	Float	V	0A	B0

32739	Minimum value of L3 to L1 voltage	4	Float	V	0A	B2
For CH02, CH03 and CH04 registers, CH02 registers is CH01 + 3000; CH03 registers is CH01 + 6000; CH04 registers is CH01 +9000. For example, the registers of V1 of CH01 , CH02, CH03, CH04 are below: CH01: 30001 ; CH02: 33001; CH03: 36001; CH04: 39001						

The addresses below are for the total measurement for all loads:

Address (Register)	**Input Register Parameter**				**Modbus Protocol Start Address Hex**	
	Description	**Length (bytes)**	**Data Format**	**Units**	**Hi Byte**	**Lo Byte**
312049	Sum of line currents.	4	Float	A	2F	10
312053	Total system power.	4	Float	W	2F	14
312057	Total system volt amps.	4	Float	VA	2F	18
312061	Total system VAr.	4	Float	VAr	2F	1C
312073	Total import active energy	4	Float	kWh	2F	28
312075	Total export active energy	4	Float	kWH	2F	2A
312077	Total import reactive energy	4	Float	kVArh	2F	2C
312079	Total export reactive energy	4	Float	kVArh	2F	2E
312081	Total apparent energy	4	Float	kVAh	2F	A0
312343	Total active Energy (3)	4	Float	kWh	30	36
312345	Total reactive Energy (3)	4	Float	kVArh	30	38
312397	Net Total Active Energy	4	Float	kWh	30	6C
312399	Net Total Reactive Energy	4	Float	kVArh	30	6E

Note:

(1). The power factor value indicates the direction of the current. Positive value refers to forward current, negative value refers to reverse current.

For example, PF=0.98, it means the current is forward flow;

if PF= -0.98, it means the current is reverse flow.

(2). The power sum demand calculation is based on total power = import power – export power.

(3). Total Energy = Import energy + Export energy. For example: total active energy = import active energy + export active energy

(4). Net Energy = Import energy – Export energy. For example: Net active energy = import active energy – export active energy

---

4.2.2 Holding Register, Function code (Hex): 03(read) / 10(write)

Address Register	Parameter	Modbus Protocol Start Address Hex		Valid range	Mode
		High Byte	Low Byte		
40001	Demand Time	00	00	Read minutes into first demand calculation. When the Demand Time reaches the Demand Period then the demand values are valid. **Length : 4 byte** **Data Format : Float**	ro

40003	Demand Period	00	02	Write demand period: 0~60 minutes, Default 60. Range: 0~60, 0 means function closed **Length : 4 byte** **Data Format : Float**	r/w
40005	Slide time	00	04	Default 1, min. Range： 1 ~ (Demand Period -1). **Length : 4 byte** **Data Format : Float**	r/w
40011	System Type	00	0A	Write system type: 1 = 1P2W; 2 = 3P3W; 3 = 3P4W,(default); 4 = 1P3W; **Length : 4 byte** **Data Format : Float** (KPPA is asked)	r/w
40015	Key Parameter Programming Authorization (KPPA)	00	0E	Read: to get the status of the KPPA 0 = not authorized； 1 = authorized Write the correct password to get KPPA, enable to program key parameters. **Length : 4 byte** **Data Format : Float**	r/w
40019	Parity and stop bit	00	12	Write the network port parity/stop bits for MODBUS Protocol, where: 0 = One stop bit and no parity, default. 1 = One stop bit and even parity. 2 = One stop bit and odd parity.3 = Two stop bits and no parity. **Length : 4 byte** **Data Format : Float**	r/w
40021	Modbus address	00	14	Write the Modbus address for the whole meter In one communication address mode, only one address is to be set. Address: 1 to 247 for MODBUS Protocol, default 1. **Length : 4 byte** **Data Format : Float**	r/w
40025	Password	00	18	Read: to get the password of the meter Write: to program the new password of the meter Default 1000 **Length : 4 byte** **Data Format : Float**	r/w
40029	Network Baud Rate	00	1C	Write the network port baud rate for MODBUS Protocol, where: 0 = 2400 baud. 1 = 4800 baud. 2 = 9600 baud, default. 3 = 19200 baud. 4 = 38400 baud **Length : 4 byte** **Data Format : Float**	r/w
40053	CT2	00	34	CT2 = 100mV **Length : 4 byte** **Data Format : Float**	ro
40061	Backlit time	00	3C	Default 60, min Range 0~121， 0 means backlit always on ， 121 means backlit always off **Length : 4byte** **Data Format : Float**	r/w
40257	CT1 of L1 on CH01	01	00	CT1 Range 1-9999A default 100， **Length : 4 byte** **Data Format : Float** Note： Access permission is required to set up	r/w
40259	CT1 of L2 on CH01	01	02	CT1 Range 1-9999A， default 100， **Length : 4 byte** **Data Format : Float** Note： Access permission is required to set up	r/w
40261	CT1 of L3 on	01	04	CT1 Range 1-9999A， default 100，	r/w

	CH01			**Length : 4 byte** **Data Format : Float** Note：Access permission is required to set up	
40263	CT1 of L1 on CH02	01	06	CT1 Range 1-9999A，default 100， **Length : 4 byte** **Data Format : Float** Note：Access permission is required to set up	r/w
40265	CT1 of L2 on CH02	01	08	CT1 Range 1-9999A，default 100， **Length : 4 byte** **Data Format : Float** Note：Access permission is required to set up	r/w
40267	CT1 of L3 on CH02	01	0A	CT1 Range 1-9999A，default 100， **Length : 4 byte** **Data Format : Float** Note：Access permission is required to set up	r/w
40269	CT1 of L1 on CH03	01	0C	CT1 Range 1-9999A， default 100， **Length : 4 byte** **Data Format : Float** Note：Access permission is required to set up	r/w
40271	CT1 of L2 on CH03	01	0E	CT1 Range 1-9999A， default 100， **Length : 4 byte** **Data Format : Float** Note：Access permission is required to set up	r/w
40273	CT1 of L3 on CH03	01	10	CT1 Range 1-9999A， default 100， **Length : 4 byte** **Data Format : Float** Note：Access permission is required to set up	r/w
40275	CT1 of L1 on CH04	01	12	CT1 Range 1-9999A， default 100， **Length : 4 byte** **Data Format : Float** Note：Access permission is required to set up	r/w
40277	CT1 of L2 on CH04	01	14	CT1 Range 1-9999A， default 100， **Length : 4 byte** **Data Format : Float** Note：Access permission is required to set up	r/w
40279	CT1 of L3 on CH04	01	16	CT1 Range 1-9999A， default 100， **Length : 4 byte** **Data Format : Float** Note：Access permission is required to set up	r/w
40281	Current direction of CH01	01	18	Range 0~7， default 0 0 = CT1 Frd，CT2 Frd ， CT3 Frd 1 = CT1 Rev，CT2 Frd ， CT3 Frd 2 = CT1 Frd ， CT2 Rev ， CT3 Frd 3 = CT1 Rev ， CT2 Rev ， CT3 Frd 4 = CT1 Frd ， CT2 Frd ， CT3 Rev 5 = CT1 Rev ， CT2 Frd ， CT3 Rev 6 = CT1 Frd ， CT2 Rev ， CT3 Rev 7 = CT1 Rev ， CT2 Rev ， CT3 Rev default 0 **Length: 4 byte** **Data Format : Float** Note：Access permission is required to set up	r/w
40283	Current direction of CH02	01	1A	Range 0~7，default 0 0 = CT1 Frd ， CT2 Frd ， CT3 Frd 1 = CT1 Rev ， CT2 Frd ， CT3 Frd 2 = CT1 Frd ， CT2 Rev ， CT3 Frd 3 = CT1 Rev ， CT2 Rev ， CT3 Frd 4 = CT1 Frd ， CT2 Frd ， CT3 Rev 5 = CT1 Rev ， CT2 Rev ， CT3 Rev 6 = CT1 Frd ， CT2 Rev ， CT3 Rev 7 = CT1 Rev ， CT2 Rev ， CT3 Rev	r/w

				default 0 **Length : 4 byte** **Data Format : Float** Note：Access permission is required to set up	
40285	Current direction of CH03	01	1C	Range 0~7，default 0 0 = CT1 Frd ， CT2 Frd ， CT3 Frd 1 = CT1 Rev ， CT2 Frd ， CT3 Frd 2 = CT1 Frd ， CT2 Rev ， CT3 Frd 3 = CT1 Rev ， CT2 Rev ， CT3 Frd 4 = CT1 Frd ， CT2 Frd ， CT3 Rev 5 = CT1 Rev ， CT2 Frd ， CT3 Rev 6 = CT1 Frd ， CT2 Rev ， CT3 Rev 7 = CT1 Rev ， CT2 Rev ， CT3 Rev default 0 **Length: 4 byte Data** **Format : Float** Note：Access permission is required to set up	r/w
40287	Current direction of CH04	01	1E	Range 0~7，default 0 0 = CT1 Frd ， CT2 Frd ， CT3 Frd 1 = CT1 Rev ， CT2 Frd ， CT3 Frd 2 = CT1 Frd ， CT2 Rev ， CT3 Frd 3 = CT1 Rev ， CT2 Rev ， CT3 Frd 4 = CT1 Frd ， CT2 Frd ， CT3 Rev 5 = CT1 Rev ， CT2 Frd ， CT3 Rev 6 = CT1 Frd ， CT2 Rev ， CT3 Rev 7 = CT1 Rev ， CT2 Rev ， CT3 Rev default 0 **Length: 4 byte Data** **Format : Float** Note：Access permission is required to set up	r/w
461457	Reset historical data	F0	10	**XX 00** = reset demand data **XX 03** =reset energy data **XX 04** =reset Maximum and Minimum data where，XX=00 means reset data of 4 channels r；XX=01 means reset data of CH01；XX=02 means reset data of CH02；XX=03 means reset data of CH03；XX=04 means reset data of CH04 **Length:** 2 byte **Data Format** : Hex **Note: xx 03 is not available for all models. Only those meter has energy resettable function has this option.**	wo
463793	Running time	F9	30	Continuous working period。 Unit：hour If write 0 into register, it means reset the running time. **Length: 4 byte** **Data Format : Float**	r/w
463795	Load running time	F9	32	The running time on load Unit：hour If write 0 into register, it means reset the loading running time. **Length : 4 byte** **Data Format : Float** **Note: when there is load detected on any channel, the time will counts.**	r/w
464513	Serial number	FC	00	Serial number **Length : 4 byte** **Data Format : unsigned int32** **Note: Only read**	ro
464515	Meter Code	FC	02	Meter code，fixed 00 86 **Length : 4 byte** **Data Format : Hex** **Note: Only read**	ro
464641	Software	FC	80	Version number of software XX.YY	ro

	version number			**Data Format：** the first byte means XX，the second byte means YY **Length : 2 byte** **Data Format : Hex** **Note: Only read**	
464643	Hardware version number	FC	82	Version number of hardware XX.YY **Data Format：** the first byte means XX，the second byte means YY **Length : 2 byte** **Data Format : Hex** **Note: Only read**	ro
464645	Version number on display	FC	84	The version number showed on the display XX.YY **Data Format：** the first byte means XX， the second byte means YY **Length : 2 byte** **Data Format : Hex** **Note: Only read**	ro
464673	Switch of ML work mode	FC	A0	Switch of work mode of AP15-***-RJ12 31 64：one address work mode； 34 64：four addresses work mode； **Length : 2 byte** **Data Format : Hex** (KPPA is asked)	r/w

4.3 Protocol of Multi Communication Addresses Mode

4.3.1 Input Register, Function code (Hex): 04

Address (Register)	**Input Register Parameter**				**Modbus Protocol Start Address Hex**	
	Description	**Length (bytes)**	**Data Format**	**Units**	**Hi Byte**	**Lo Byte**
Below are registers for CH01, CH02, CH03 and CH04. The four channels registers are the same. But their communication address (001~247) is different.						
30001	Phase 1 line to neutral volts	4	Float	V	00	00
30003	Phase 2 line to neutral volts	4	Float	V	00	02
30005	Phase 3 line to neutral volts	4	Float	V	00	04
30007	Phase 1 current	4	Float	A	00	06
30009	Phase 2 current	4	Float	A	00	08
30011	Phase 3 current	4	Float	A	00	0A
30013	Phase 1 active power	4	Float	W	00	0C
30015	Phase 2 active power	4	Float	W	00	0E
30017	Phase 3 active power	4	Float	W	00	10
30019	Phase 1 apparent power	4	Float	VA	00	12
30021	Phase 2 apparent power	4	Float	VA	00	14
30023	Phase 3 apparent power	4	Float	VA	00	16
30025	Phase 1 reactive power	4	Float	VAr	00	18
30027	Phase 2 reactive power	4	Float	VAr	00	1A
30029	Phase 3 reactive power	4	Float	VAr	00	1C
30031	Phase 1 power factor (1)	4	Float	None	00	1E
30033	Phase 2 power factor (1)	4	Float	None	00	20
30035	Phase 3 power factor (1)	4	Float	None	00	22
30037	Phase 1 phase angle	4	Float	Degrees	00	24
30039	Phase 2 phase angle	4	Float	Degrees	00	26

30041	Phase 3 phase angle	4	Float	Degrees	00	28
30043	Average line to neutral volts	4	Float	V	00	2A
30047	Average line current	4	Float	A	00	2E
30049	Sum of line currents	4	Float	A	00	30
30053	Total system power	4	Float	W	00	34
30057	Total system volt amps	4	Float	VA	00	38
30061	Total system VAr	4	Float	VAr	00	3C
30063	Total system power factor (1)	4	Float	None	00	3E
30067	Total system phase angle	4	Float	Degrees	00	42
30071	Frequency of supply voltages	4	Float	Hz	00	46
30073	Total import active energy	4	Float	kWh	00	48
30075	Total export active energy	4	Float	kWH	00	4A
30077	Total import reactive energy	4	Float	kVArh	00	4C
30079	Total export reactive energy	4	Float	kVArh	00	4E
30081	Total apparent energy	4	Float	kVAh	00	50
30083	Ah	4	Float	Ah	00	52
30085	Total system power demand (2)	4	Float	W	00	54
30087	Maximum total system power demand (2)	4	Float	W	00	56
30089	Import active power demand	4	Float	W	00	58
30091	Import active power max demand	4	Float	W	00	5A
30093	Export active power demand	4	Float	W	00	5C
30095	Export active power max. demand	4	Float	W	00	5E
30101	Total system VA demand	4	Float	VA	00	64
30103	Maximum total system VA demand	4	Float	VA	00	66
30105	Neutral current demand	4	Float	Amps	00	68
30107	Maximum neutral current demand	4	Float	Amps	00	6A
30109	Total system reactive power demand (2)	4	Float	VAr	00	6C
30111	Maximum total system reactive power demand(2)	4	Float	VAr	00	6E
30201	Line 1 to Line 2 volts	4	Float	V	00	C8
30203	Line 2 to Line 3 volts	4	Float	V	00	CA
30205	Line 3 to Line 1 volts	4	Float	V	00	CC
30207	Average line to line volts	4	Float	V	00	CE
30225	Neutral current	4	Float	A	00	E0
30235	Phase 1 L/N volts THD	4	Float	%	00	EA
30237	Phase 2 L/N volts THD	4	Float	%	00	EC
30239	Phase 3 L/N volts THD	4	Float	%	00	EE
30241	Phase 1 Current THD	4	Float	%	00	F0
30243	Phase 2 Current THD	4	Float	%	00	F2
30245	Phase 3 Current THD	4	Float	%	00	F4
30249	Average line to neutral volts THD	4	Float	%	00	F8
30251	Average line current THD	4	Float	%	00	FA
30259	Phase 1 current demand	4	Float	A	01	02
30261	Phase 2 current demand	4	Float	A	01	04
30263	Phase 3 current demand	4	Float	A	01	06
30265	Maximum phase 1 current demand	4	Float	A	01	08
30267	Maximum phase 2 current demand	4	Float	A	01	0A
30269	Maximum phase 3 current demand	4	Float	A	01	0C
30335	Line 1 to line 2 volts THD	4	Float	％	01	4E
30337	Line 2 to line 3 volts THD	4	Float	％	01	50
30339	Line 3 to line 1 volts THD	4	Float	％	01	52
30341	Average line to line volts THD	4	Float	％	01	54
30343	Total active Energy (3)	4	Float	kWh	01	56
30345	Total reactive Energy (3)	4	Float	kVArh	01	58
30347	L1 import active Energy	4	Float	kWh	01	5A
30349	L2 import active Energy	4	Float	kWh	01	5C
30351	L3 import active Energy	4	Float	kWh	01	5E
30353	L1 export active Energy	4	Float	kWh	01	60
30355	L2 export active Energy	4	Float	kWh	01	62
30357	L3 export active Energy	4	Float	kWh	01	64
30359	L1 total active Energy	4	Float	kWh	01	66

30361	L2 total active Energy	4	Float	kWh	01	68
30363	L3 total active Energy	4	Float	kWh	01	6A
30365	L1 import reactive energy	4	Float	kVArh	01	6C
30367	L2 import reactive energy	4	Float	kVArh	01	6E
30369	L3 import reactive energy	4	Float	kVArh	01	70
30371	L1 export reactive energy	4	Float	kVArh	01	72
30373	L2 export reactive energy	4	Float	kVArh	01	74
30375	L3 export reactive energy	4	Float	kVArh	01	76
30377	L1 total reactive energy	4	Float	kVArh	01	78
30379	L2 total reactive energy	4	Float	kVArh	01	7A
30381	L3 total reactive energy	4	Float	kVArh	01	7C
30397	Net active energy (4) (Net=Import-export)	4	Float	kWh	01	8C
30399	Net reactive energy	4	Float	kVArh	01	8E
31409	Net L1 active energy	4	Float	kWh	05	80
31411	Net L2 active energy	4	Float	kWh	05	82
31413	Net L3 active energy	4	Float	kWh	05	84
31415	Net L1 reactive energy	4	Float	kVArh	05	86
31417	Net L2 reactive energy	4	Float	kVArh	05	88
31419	Net L3 reactive energy	4	Float	kVArh	05	8A
32649	Maximum value of total active power	4	Float	W	0A	58
32655	Maximum value of L1 active power	4	Float	W	0A	5E
32657	Maximum value of L2 active power	4	Float	W	0A	60
32659	Maximum value of L3 active power	4	Float	W	0A	62
32673	Maximum value of L1 current	4	Float	A	0A	70
32675	Maximum value of L2 current	4	Float	A	0A	72
32677	Maximum value of L3 current	4	Float	A	0A	74
32683	Maximum value of L1 L-N voltage	4	Float	V	0A	7A
32685	Maximum value of L2 L-N voltage	4	Float	V	0A	7C
32687	Maximum value of L3 L-N voltage	4	Float	V	0A	7E
32689	Maximum value of line 1 to line 2 voltage	4	Float	V	0A	80
32691	Maximum value of line 2 to line3 voltage	4	Float	V	0A	82
32693	Maximum value of line 3 to line 1 voltage	4	Float	V	0A	84
32695	Minimum value of total active power	4	Float	W	0A	86
32701	Minimum value of L1 active power	4	Float	W	0A	8C
32703	Minimum value of L2 active power	4	Float	W	0A	8E
32705	Minimum value of L3 active power	4	Float	W	0A	90
32719	Minimum value of L1 current	4	Float	A	0A	9E
32721	Minimum value of L2 current	4	Float	A	0A	A0
32723	Minimum value of L3 current	4	Float	A	0A	A2
32729	Minimum value of L1 L-N voltage	4	Float	V	0A	A8
32731	Minimum value of L2 L-N voltage	4	Float	V	0A	AA
32733	Minimum value of L3 L-N voltage	4	Float	V	0A	AC
32735	Minimum value of L1 to L2 voltage	4	Float	V	0A	AE
32737	Minimum value of L2 to L3 voltage	4	Float	V	0A	B0
32739	Minimum value of L3 to L1 voltage	4	Float	V	0A	B2
CH01 shares the same register map to CH02, CH03 and CH04. For Multi communication addresses mode, the address for each channel must be set differently.						

The addresses below are for the total measurement for all loads:

Address (Register)	**Input Register Parameter**				**Modbus Protocol Start Address Hex**	
	Description	**Length (bytes)**	**Data Format**	**Units**	**Hi Byte**	**Lo Byte**
312049	Sum of line currents.	4	Float	A	2F	10
312053	Total system power.	4	Float	W	2F	14
312057	Total system volt amps.	4	Float	VA	2F	18
312061	Total system VAr.	4	Float	VAr	2F	1C

312073	Total import active energy	4	Float	kWh	2F	28
312075	Total export active energy	4	Float	kWH	2F	2A
312077	Total import reactive energy	4	Float	kVArh	2F	2C
312079	Total export reactive energy	4	Float	kVArh	2F	2E
312081	Total apparent energy	4	Float	kVAh	2F	30
312343	Total active Energy (3)	4	Float	kWh	30	36
312345	Total reactive Energy (3)	4	Float	kVArh	30	38
312397	Net Active Energy	4	Float	kWh	30	6C
312399	Net Reactive Energy	4	Float	kVArh	30	6E

Note:

(1). The power factor value indicates the direction of the current. Positive value refers to forward current, negative value refers to reverse current.

For example, PF=0.98, it means the current is forward flow;

if PF= -0.98, it means the current is reverse flow.

(2). The power sum demand calculation is based on total power = import power – export power.

(3). Total Energy = Import energy + Export energy. For example: total active energy = import active energy + export active energy

(4). Net Energy = Import energy – Export energy. For example: Net active energy = import active energy – export active erergy

4.3.2 Holding Register， Function code (Hex) : 03(reade) / 10(write)

Address Register	Parameter	Modbus Protocol Start Address Hex		Valid range	Mode
		High Byte	Low Byte		
40001	Demand Time	00	00	Read minutes into first demand calculation. When the Demand Time reaches the Demand Period then the demand values are valid. **Length : 4 byte** **Data Format : Float**	ro
40003	Demand Period	00	02	Write demand period: 0~60 minutes, Default 60. Range: 0~60, 0 means function closed **Length : 4 byte** **Data Format : Float**	r/w
40005	Slide time	00	04	Default 1, min. Range： 1 ~ (Demand Period -1). **Length : 4 byte** **Data Format : Float**	r/w
40011	System Type	00	0A	Write system type: 1 = 1P2W; 2 = 3P3W; 3 = 3P4W,(default); 4 = 1P3W; **Length : 4 byte** **Data Format : Float** (KPPA is asked)	r/w
40015	Key Parameter Programming Authorization (KPPA)	00	0E	Read: to get the status of the KPPA 0 = not authorized； 1 = authorized Write the correct password to get KPPA, enable to program key parameters. **Length : 4 byte** **Data Format : Float**	r/w
40019	Parity and	00	12	Write the network port parity/stop bits for MODBUS	r/w

	stop bit			Protocol, where: 0 = One stop bit and no parity, default. 1 = One stop bit and even parity. 2 = One stop bit and odd parity.3 = Two stop bits and no parity. **Length : 4 byte** **Data Format : Float**	
40021	Modbus address	00	14	Write the network port node Address: 1 to 247 for MODBUS Protocol. CH01 default 001； CH02 default 002； CH03 default 003； CH04 default 004； **Length : 4 byte** **Data Format : Float**	r/w
40025	Password	00	18	Read: to get the password of the meter Write: to program the new password of the meter Default 1000 **Length : 4 byte** **Data Format : Float**	r/w
40029	Network Baud Rate	00	1C	Write the network port baud rate for MODBUS Protocol, where: 0 = 2400 baud. 1 = 4800 baud. 2 = 9600 baud, default. 3 = 19200 baud. 4 = 38400 baud **Length : 4 byte** **Data Format : Float**	r/w
40053	CT2	00	34	CT2 = 100mV **Length : 4 byte** **Data Format : Float**	ro
40057	Current Direction correction（when the external CT is connected reversely）	00	38	0 = L1Frd，L2Frd，L3Frd 1 = L1 Rev，L2Frd，L3Frd 2 = L1Frd，L2 Rev，L3Frd 3 = L1 Rev，L2 Rev，L3Frd 4 = L1Frd，L2Frd，L3 Rev 5 = L1 Rev，L2Frd，L3 Rev 6 = L1 Frd，L2 Rev，L3 Rev 7 = L1 Rev，L2 Rev，L3 Rev Default 0 **Length : 4 byte** **Data Format :Float** (KPPA is asked)	r/w
40061	Backlit time	00	3C	Default 60, min Range 0~121，0 means backlit always on ，121 means backlit always off **Length : 4byte** **Data Format : Float**	r/w
40257	CT1 of L1	01	00	CT1 Range 1-9999A，default 100， **Length: 4 byte** **Data Format : Float** Note：Access permission is required to set up	r/w
40259	CT1 of L2	01	02	CT1 Range 1-9999A， default 100， **Length : 4 byte** **Data Format : Float** Note：Access permission is required to set up	r/w
40261	CT1 of L2	01	04	CT1 Range 1-9999A， default 100， **Length : 4 byte** **Data Format : Float** Note：Access permission is required to set up	r/w
461457	Reset historical data	F0	10	**00 00 = reset demand info** **Length : 2 byte** **Data Format: Hex**	wo
463793	Running time	F9	30	Continuous working period。	r/w

				Unit: hour If write 0 into register, it means reset the running time. **Length : 4 byte** **Data Format : Float**	
463795	Load running time	F9	32	The running time on load Unit： hour If write 0 into register, it means reset the on-load running time. Length : 4 byte Data Format : Float Note: when there is load detected on any channel, the time will counts.	r/w
464513	Serial number	FC	00	Serial number **Length : 4 byte** **Data Format : unsigned int32** **Note: Only read**	ro
464515	Meter Code	FC	02	Meter Code, fixed 00 86 **Length : 4 byte** **Data Format :Hex** **Note: Only read**	ro
464641	Software version number	FC	80	Version number of software XX.YY Data Format： the first byte means XX， the second byte meansYY **Length : 2 byte** **Data Format : Hex** **Note: Only read**	ro
464643	Hardware version number	FC	82	Version number of hardware XX.YY Data Format： the first byte meansXX， the second byte meansYY **Length : 2 byte** **Data Format : Hex** **Note: Only read**	ro
464645	Version number on display	FC	84	The version number showed on the display XX.YY Data Format： the first byte means XX， the second byte means YY **Length : 2 byte** **Data Format : Hex** **Note: Only read**	ro
464673	Switch of CT work modes	FC	A0	Switch of work mode of AP15-***-RJ12 ； 31 64： one address work mode； 34 64： four addresses work mode； **Length : 2 byte** **Data Format : Hex** (KPPA is asked)	r/w

4.4 Example

1. Read Input Registers

Example: read "Total active energy"
Request: 01 04 01 56 00 02 90 27
Where, 01 = Meter address
04 = Function code
01 = High byte of registers starting address
56 = Low byte of registers starting address
00 = High byte of registers number
02 = Low byte of registers number
90 = CRC Low
27 = CRC High
Response: 01 04 04 43 66 33 34 1B 38
Where, 01 = Meter address
04 = Function code
04 = Byte count
43 = Data, (High Word, High Byte)
66 = Data, (High Word, Low Byte)
33 = Data, (Low Word, High Byte)
34 = Data, (Low Word, Low Byte)
1B = CRC Low
38 = CRC High
Note: 43 66 33 34(Hex) = 230.2 (Floating point)

2. Read Holding Register

Example: read"pulse1 width"
Request: 01 03 00 0C 00 02 04 08
Where, 01 = Meter address
03 = Function code
00 = High byte of registers starting address
0C = Low byte of registers starting address
00 = High byte of registers number
02 = Low byte of registers number
04 = CRC Low
08 = CRC High
Response: 01 03 04 42 C8 00 00 6F B5
Where, 01 = Meter address
03 = Function code
04= Byte Count
42 = Data, (High Word, High Byte)
C8 = Data, (High Word, Low Byte)
00 = Data, (Low Word, High Byte)
00 = Data, (Low Word, Low Byte)
6F = CRC Low
B5 = CRC High
Note: 42 C8 00 00 (Hex) = 100 (Floating point)

3. Write Holding Registers

Example: set "Pulse 1 constant" = 100 imp/kWh
Request: 01 10 00 16 00 02 04 3F 80 00 00 7F 75
Where， 01 = Meter address
10 = Function code
00 = High byte of registers starting address
16 = Low byte of registers starting address
00 = High byte of registers number
02 = Low byte of registers number
04 = Byte Count
3F = Data, (High Word, High Byte)
80 = Data, (High Word, Low Byte)
00 = Data, (Low Word, High Byte)
00 = Data, (Low Word, Low Byte)
7F = CRC Low
75 = CRC High

Note: 3F 60 00 00 (Hex) = 1 (Floating point), 1 means 100 imp/kWh
Response: 01 10 00 16 00 02 A0 0C
Where, 01 = Meter address
10 = Function code
00 = High byte of registers starting address
16 = Low byte of registers starting address
00 = High byte of registers number
02 = Low byte of registers number
A0 = CRC Low
0C = CRC High

Sifam Tinsley Instrumentation Ltd.
1 Warner Drive, Springwood Industrial Estate
Braintree, Essex, UK
CM7 2YW

Tel:- +44 (0) 1376 335271 ext 201
Website:-www.sifamtinsley.co.uk