sifam tinsley
PRECISION INSTRUMENTATION

MULTIFUNCTION METER
ND30BAC
www.sifamtinsley.co.uk

DATASHEET Issue 1.0

Electrical Safety CAT III

Multifunction Meters

Transducers & Isolators

Temperature Controllers

Converters & Recorders

Digital Panel Meters

Current Transformers

Analogue Panel Meters

Shunts

Digital Multimeters

Clamp Meters

Insulation Testers

ND30BAC

METER OF POWER NETWORK PARAMETERS WITH BACnet

Features

- Measurement of 54 power network parameters, including current and voltage harmonics up to 51st, in 1-phase 2-wire or 3-phase 3 or 4-wire balanced and unbalanced systems
- Graphical colour display: LCD TFT 3,5", 320 x 240 pixels, fully configurable by a user (10 views, 8 parameters in each view)
- Indications include the values of programmed ratios
- Memory of minimum and maximum values
- 2 configurable alarm outputs
- Digital output RS-485 - MODBUS protocol
- Modern and user-friendly BACnet/ IP interface
- Programming of parameters using free econ software
- Battery backup RTC
- Overall dimensions: 96 x 96 x 77 mm.

SUBJECT TO CHANGE WITHOUT NOTICE
This manual superseded all previous versions – please keep for future reference

ND30BAC - METER OF POWER NETWORK PARAMETERS WITH BACnet

Example of Application

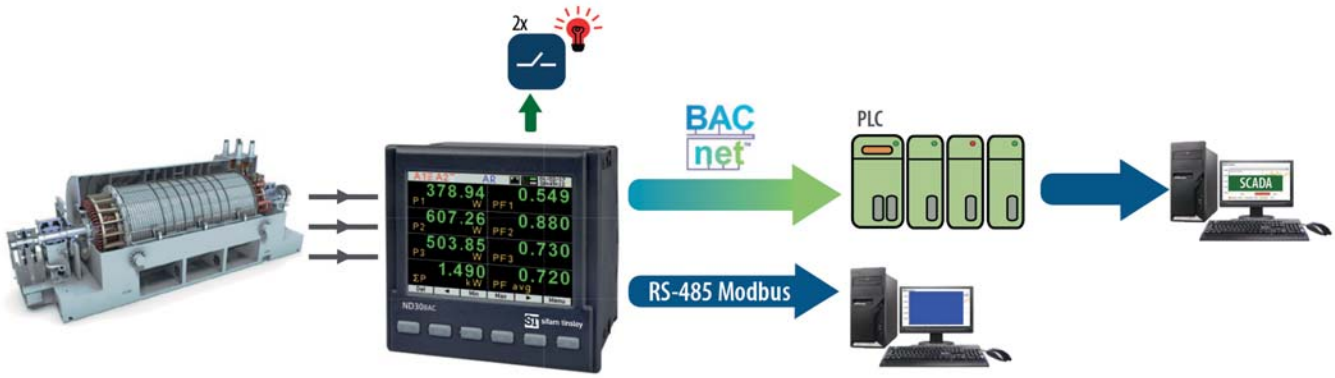

Measurement and Visualization of Power Network Parameters

- Phase voltages: U_1, U_2, U_3
- Phase-to-phase voltages: U_{12}, U_{23}, U_{31}
- Phase currents i_1, i_2, i_3
- Active phase powers: $P(W)_1$, $P(W)_2$, $P(W)_3$
- Reactive phase powers: $Q(Var)_1$, $Q(Var)_2$, $Q(Var)_3$
- Apparent phase powers: $S(VA)_1$, $S(VA)_2$, $S(VA)_3$
- Active power factors: PF_1, PF_2, PF_3
- Three phase total power factor: total 3pf_t
- Reactive/active power factors: $tg\varphi_1$, $tg\varphi_2$, $tg\varphi_3$
- Active, reactive and apparent 3-phase power: P(W), Q(Var), S(VA)
- Mean 3-phase power factors: PF, $tg\varphi$
- Frequency f
- Mean 3-phase voltage: U_S
- Mean phase-to-phase voltage: U_{MF}
- Mean 3-phase current: i_S
- 15, 30, 60 minutes mean active/reactive/apparent power: $P(W)_{demand}$, $Q(Var)_{demand}$, $S(VA)_{demand}$ and mean current $_{demand}$
- Mean apparent power $S(VA)_{demand}$
- Average current i_{demand}
- Active, reactive and apparent 3-phase energy: EnP (Wh) Import & Export, EnQ (Varh) inductive or capacitive, EnS (VAh),
- Active, reactive and apparent energy from external counter: EnPE
- Total harmonic content coefficients for phase voltages and currents THD_{U1}, THD_{U2}, THD_{U3}, THD_{i1}, THD_{i2}, THD_{i3} and for 3-phase voltages and currents THD_U, THD_i
- Harmonics for current and phase voltage up to 51 st!
- kVAR demand
- Memory of minimum and maximum (Peak) values, Voltage (U), Current (I), Active Power (W), Reactive Power (Var), Apparent Power (VA), Power Factor (PF), Frequency (Hz), Demands. Temperature, THD

Features

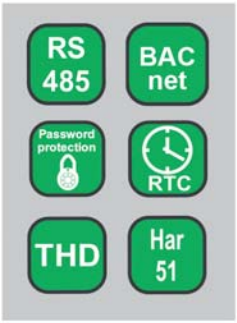

Inputs

Outputs

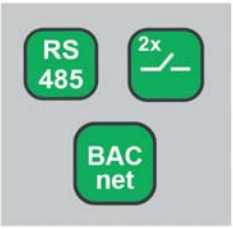

Galvanic Isolation

ND30BAC - METER OF POWER NETWORK PARAMETERS WITH BACnet

TECHNICAL DATA

MEASURING RANGE						ACCURACY
Measured value	Measuring range	L1	L2	L3	Σ	Class (*) / Basic error (*) class relative to the measured value acc. to EN61557-12
Current 1/5 A 1 A~ 5 A~	0.010 ..0.100..1.200 A (tr_I=1) 0.050 ..0.500.. 6.000 A (tr_I=1) ...20.00 kA (tr_I≠1)	•	•	•		Class 0.2
Voltage L-N 57.7 V~ 230 V~ 400 V~	5.7..11.5 ..70.0 V (tr_U=1) 23.0..46 .. 276.0 V (tr_U=1) 40.0..80 .. 480.0 V (tr_U=1) ...480.0 kV (tr_U≠1)	•	•	•		Class 0.2
Voltage L-L 100 V~ 400 V~ 690 V~	10.0 ..20..120.0 V (tr_U=1) 40.0..80 .. 480.0 V (tr_U=1) 69.0..138 .. 830.0 V (tr_U=1) ...830.0 kV (tr_U≠1)	•	•	•		Class 0.5
Active power P_i, average active power P_{dt}	.. (-)1999.9 W ..(-)1999.9 MW (tr_U≠1.tr_I≠1)	•	•	•	•	Class 0.5
Reactive power Q_i	.. (-)1999.9 Var ..(-)1999.9 MVar (tr_U≠1.tr_I≠1)	•	•	•	•	Class 1
Apparent power S_i, avarage apparent power S_{dt}	..1999.9 VA ..1999.9 MVA (tr_U≠1.tr_I≠1)	•	•	•	•	Class 0.5
Active energy EnP (imported or exported)	.. (-)1999.9 Wh ..(-)1999.9 MWh (tr_U≠1.tr_I≠1)				•	Class 0.5
Reactive energy EnQ (inductive or capacitive)	.. (-)1999.9 Varh ..(-)1999.9 MVarh (tr_U≠1.tr_I≠1)				•	Class 1
Apparent energy EnS	.. 1999.9 VAh ..1999.9 MVAh (tr_U≠1.tr_I≠1)				•	Class 0.5
Active power factor PF_i	-1.00 ..0 ..1.00	•	•	•	•	± 0.01 of basic error
Coefficient $tg\varphi_i$ (ratio of reactive power to active power)	-1.20 ..0 ..1.20	•	•	•	•	± 0.01 of basic error
Frequency f	45.00..65.00 Hz				•	Class 0.1
Total harmonic distortion of voltage THDU and current THDI	0.0 ..100.0 %	•	•	•	•	Class 5 50 / 60 Hz
Amplitudes of the voltage U_{h1} ...U_{h50}, and current I_{h1} ... I_{h50}	0.0 ..100.0 %	•	•	•		Class 5 50 / 60 Hz

tr_I, tr_U – ratio of current and voltage transformer

DIGITAL INTERFACE

Interface type	Transmission protocol		Remarks
RS-485	Modbus RTU 8N2,8E1,8O1,8N1	Address 1..247	baud rate: 4.8, 9.6, 19.2 38.4, 57.6, 115.2 kbit/s
BACnet	BACnet/IP		

ND30BAC - METER OF POWER NETWORK PARAMETERS WITH BACnet

EXTERNAL FEATURES		
Readout field	graphic color display LCD TFT 3,5", 320 x 240 pixels	
Overall dimensions	96 x 96 x 77 mm	mounting hole 92.5 x 92.5 mm
Weight	0.3 kg	
Protection grade	from frontal side: IP65	from terminal side: IP20
RATED OPERATING CONDITIONS		
Supply voltage	85...253 V a.c. (40...50...400 Hz) , 90...300 V d.c. or 20...40 V a.c., 20...60 V d.c.	power consumption ≤ 6 VA
Power consumption	in voltage circuit ≤ 0.2 VA	in current circuit ≤ 0.1 VA
Input signal	0...0.1...1.2 In; 0.1...0.2...1.2 Un for current, voltage, PF, tgφ	frequency 45...50...60...65 Hz, sinusoidal (THD ≤ 8%)
Power factor	-1...0...1	
Preheating time	5 min.	
Ambient temperature	-10...23...55°C, class K55 acc. to EN61557-12	
Humidity	0...40...65...95%	without condensation
Operating position	any	
External magnetic field	≤ 40...400 A/m d.c.	≤ 3 A/m a.c. 50/60 Hz
Short-term overload	voltage input: 2 Un (5 sec.)	current input 50 A (1 sec.)
Admissible crest factor	current: 2	voltage: 2
Additional error (in % of the intrinsic error)		from ambient temperature change: < 50% / 10°C
SAFETY AND COMPABILITY REQUIREMENTS		
Electromagnetic compatibility	noise immunity	acc. to EN 61000-6-2
	noise emissions	acc. to EN 61000-6-4
Isolation insured by the casing	double	acc. to EN 61010-1
Isolation between circuits	basic	acc. to EN 61010-1
Polution level	2	acc. to EN 61010-1
Installation category	III	acc. to EN 61010-1
Maximal phase-to-earth voltage	• for supply circuit and relay outputs 300 V • for measuring input 500 V • for circuits of RS-485, Ethernet, pulse input and output, analog outputs: 50 V	acc. to EN 61010-1
Altitude a.s.l.	< 2000 m	

CONNECTION DIAGRAMS

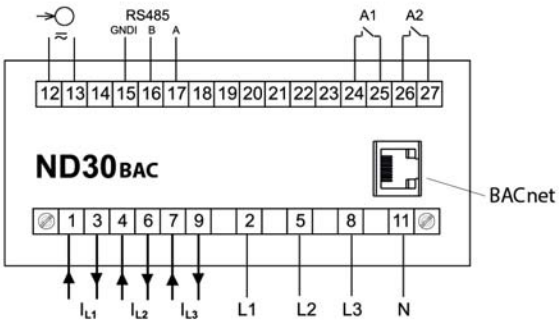

Description of meter connections strips

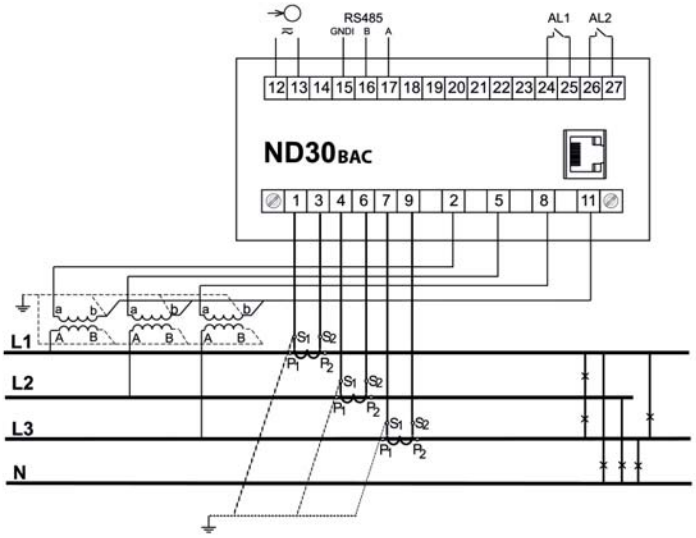

Indirect measurement in 4-wire network - connection of input signals

ND30BAC - METER OF POWER NETWORK PARAMETERS WITH BACnet

DISPLAING OF MEASUREMENT PARAMETERS

up to 10 programmable screens
(8 parameters per page);
ability to change color for all screens

Available colors for digital indications:

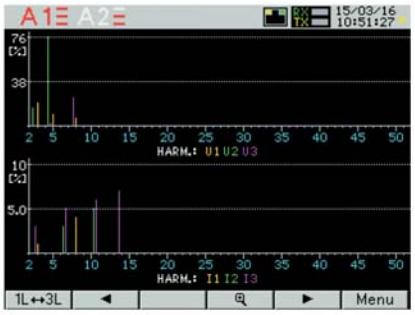

two screens dedicated to harmonics;
indication of individual harmonic
for voltages and currents (up to 51st);
bargraph presentation for all harmonics
with zoom function

easy to use and intuitive menu;
information bar with status of: phase
sequence, alarm outputs and interfaces,
time and date

ND30BAC - METER OF POWER NETWORK PARAMETERS WITH BACnet

METER CONFIGURATION WITH FREE eCON SOFTWARE

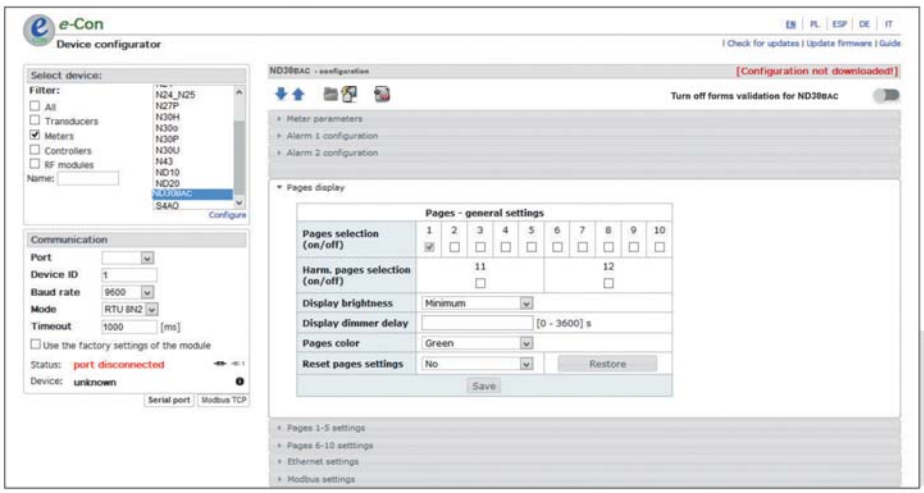

ability to configure and update ND30BAC with free eCon software (via RS-485)

ORDERING CODE

Meter ND30BAC -	X	X	X	X	XX	X	X
Input voltage (phase/phase-to-phase) Un:							
3 x 57.7/ 100 V, 3x 230/ 400 V	1						
3 x 110/ 190 V, 3 x 400/ 690 V	2						
Additional outputs /inputs:							
2 relays		1					
Interface:							
BACnet/IP and RS485(Modbus RTU)			2				
Supply:							
85...253 V a.c., 90...300 V d.c.				1			
20...40 V a.c., 20...60 V d.c.				2			
Version:							
standard					00		
custom-made*					XX		
Language:							
Polish						P	
English						E	
other*						X	
Acceptance tests:							
without additional quality requirements							0
with an extra quality inspection certificate							1
acc.to customer's request*							X

* only after agreeing with the manufacturer

Order example:
The code: **ND30BAC - 1 1 2 1 00 E 0** means:

ND30BAC - meter ND30BAC
1 - input voltage 3 x 57.7/ 100 V, 3x 230/ 400 V
1 - 2 relays
2 - BACnet/IP and RS485(Modbus RTU)
1 - supply: 85...253 V a.c., 90...300 V d.c.
00 - standard version
E - user's manual in English
0 - without additional quality requirements.

ND30BAC - METER OF POWER NETWORK PARAMETERS WITH BACnet

SEE ALSO:

Contact

Sifam w Instrumentation Ltd

1 Warner Drive
Springwood Industrial Estate
Braintree, Essex
CM7 2YW

Tel: 01376 335271
E-mail: sales@sifamtinsley.com

www.sifamtinsley.co.uk