sifam tinsley
PRECISION INSTRUMENTATION

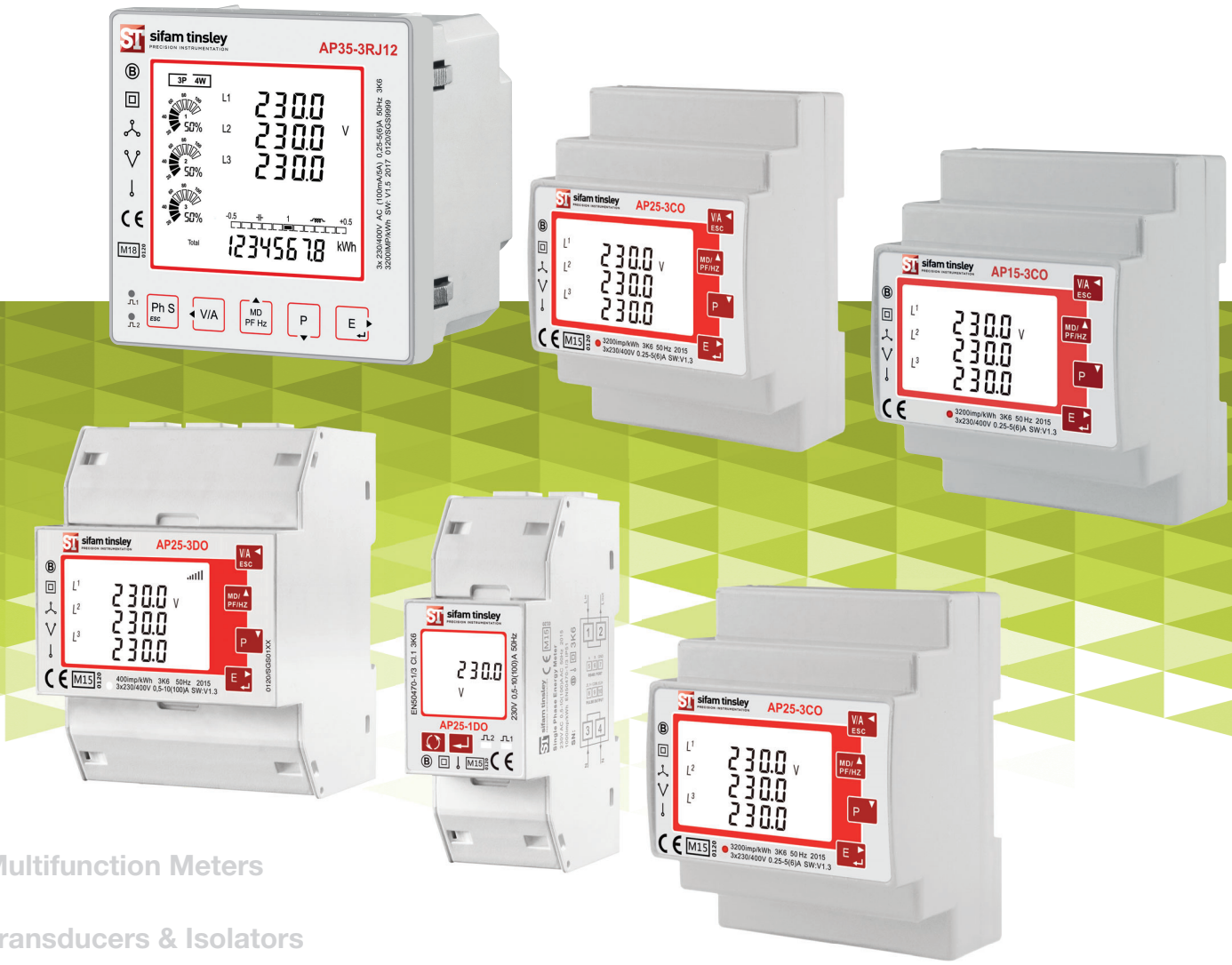

Multifunction Meters

Transducers & Isolators

Temperature Controllers

Converters & Recorders

Digital Panel Meters

Current Transformers

Analogue Panel Meters

Shunts

Digital Multimeters

Clamp Meters

Insulation Testers

KWH/MULTI FUNCTION ENERGY METERS

for single phase and three phase applications

Powered by technology
...driven by service

kWh/Multi Function Range

Applications

- Switchgear
- Distribution systems
- Generator sets
- Control panels
- Energy management
- Building management
- Utility power monitoring
- Process control
- Motor control

kWh/Multi Function Range

SifamTinsley kWh Energy Meters for single phase and three phase MID and non MID energy monitoring applications with either direct connection or current transformer operated with built-in pulsed output or Modbus RS485 RTU for remote communication. Offering DIN Rail mounted and Panel mounted case styles for Electrical Energy Applications. These new generation modern design power monitoring meters that will measure and display electrical power quality parameters such as, voltage, current, power, active and reactive energy imported or exported. The Energy is measured in terms of kWh, kVarh, furthermore the Max demand current value can be measured over pre-set periods of up to 60 minutes.

MID (Measuring Instrument Directive)

Sifam Tinsley's full range of MID (Measuring Instrument Directive) Certified Electricity sub meters that have been certified by SGS who are the notified body for the MID approval process. MID is a European legislation and a legal requirement for applications where the sub meters are being used to invoice or bill for electricity consumption. MID was introduced in 2006 and as of 2016 replaced Ofgem. There are two parts to the MID certification, Annex B is where the meter itself undergoes certain tests such as accuracy, EMC and voltage impulse etc. Then there is Annex D this is the production process and traceability and our factory every year will be audited to insure it is up to standards with the required legislation. We launched our first MID certified product in 2014 and have our factory has been certified for the last 4 years. We have further enhanced our offerings and range to insure we are able to cover all applications.

View our full range online www.sifamtinsley.co.uk

kWh/Multi Function Range - Contents

AP15-M45 2-3

AP15-M45 meters have been produced to offer a low-cost solution to metering low Amp circuits.

AP15-K45 4-5

AP15-K45 have been produced to offer a low-cost solution to metering low Amp circuits working directly connected to a maximum load 45A AC circuit

AP15-1DO 6-7

AP15-1DO, Single Phase Digital kWh/Multi function Meter 100 Amp Direct Connection (built-in Modbus & Pulsed Output).

AP15-3CO 8-9

AP15-3CO, Single/three Phase Digital kWh/Multi function Meter Current Transformer Operated (built-in Modbus & Pulsed Output).

AP15-3DO 10-11

AP15-3DO, Single/three Phase Digital kWh/Multi function Meter 100 Amp Direct Connection (built-in Modbus & Pulsed Output).

AP15-3CO-BI 12-13

AP15-3CO-BI three Phase Digital kWh Meter Current Transformer Operated (built-in Pulsed Output).

AP25-3DO-BI 14-15

AP25-3DO-BI, three Phase Digital kWh Meter 100 Amp Direct Connection (built-in Pulsed Output).

AP25-1DO 16-17

MID CERTIFIED

AP25-1DO, MID Approved Single Phase Digital kWh/Multi function Meter 100 Amp Direct Connection (built-in Modbus & Pulsed Output).

AP25-3CO 18-19

MID CERTIFIED

AP25-3CO, MID Approved Single/three Phase Digital kWh/Multi function Meter Current Transformer Operated (built-in Modbus & Pulsed Output).

AP25-3DO 20-21

MID CERTIFIED

AP15-3DO MID Approved Single/three Phase Digital kWh/Multi function Meter 100 Amp Direct Connection (built-in Modbus & Pulsed Output).

AP15-3DL RJ12 22-23

AP15-3DL-RJ12, Dual load kWh/Multi function meter, current transformer (100mA) operated, (built-in Modbus & Pulsed Output).

View our full range online www.sifamtinsley.co.uk

AP25-3 Panel Kit for DIN Rail Power Meter 24

AP25-3 panel kit to work with the following models AP15/AP25 (3- Phase models only).

This panel kit has been engineered to work with the following models from the Sifam Tinsley range: AP25-3CO & AP25-3DO.

AP35-3RJ12 25-26

MID CERTIFIED

AP35-3RJ12, MID Approved Single/three Phase Digital kWh/Multi function Meter Current Transformer (100mA) Operated

(built-in Modbus & Pulsed Output).

AP15-P5CO 27-18

AP15-P5CO, 96mm² Panel Mounted Digital 1/5A Multifunction Meter

Single/three Phase Digital kWh/Multi function Meter Current Transformer (1/5A) Operated

(built-in Modbus & Pulsed Output).

AP15-M45

Sifam Tinsleys AP15-M45 meters have been produced to offer a low-cost solution to metering low Amp circuits. The AP15-M45 work directly connected to a maximum load 45A AC circuit.

This particular version of the AP15-M45 has Dual Pulsed Outputs as well as Built In RS485 Modbus RTU comms. The AP15-M45 measures a vast range of parameters, including Voltage, Current and Power Factor.

All AP15-M45 meters are housed in a 1 Module DIN rail-mounted housing. They also come complete with sealable terminal covers to stop any tampering with the connections.

AP15-M45

Features

- Class B (kWh) EC Directive 2004/22/EC
- Dual Pulsed Outputs
- RS485 Modbus RTU Comms
- Digital Backlit Display

1. Parameters

- Voltage (V)
- Active Power (kW)
- Frequency (Hz)
- Export Active Energy (kWh)
- Current (A)
- Power Factor (PF)
- Import Active Energy (kWh)
- Total Active Energy (kWh)

2. Specifications

Measured Parameters
The AP15-M45 monitors and displays the following parameters of a single phase two wire (1p2w) system:

Voltage and Current

- Phase to Neutral Voltage - 176 to 276V AC
- Phase Current - Imin-Ib(Imax) 0.25-5(45)A AC

Power factor and Frequency and Max. Demand

- Frequency in Hz
- Instantaneous power:
- Power 0 to 12 kW
- Reactive power 0 to 12 kVAr
- Volt-amps 0 to 12 kVA
- Maximum demanded power since last Demand reset Power factor

Energy Measurements

Imported/Exported active energy	0 to 99999.99 kWh
Imported/Exported reactive energy	0 to 99999.99 kVArh
Total active energy	0 to 99999.99 kWh
Total reactive energy	0 to 99999.99 kVArh

Measured Inputs

Nominal Voltage Input	(Ph+N) 176 to 276V
Max Continuous Voltage	120% of nominal
Nominal Input Current	0.5-10(100)A
Max Continuous Current	120% of nominal
Frequency	50Hz(±10%)

Accuracy

Voltage	0·5% of range maximum
Current	0·5% of nominal
Frequency	0·2% of mid-frequency
Power factor	1% of unity (0.01)
Active power (W)	±1% of range maximum
Reactive power (VAr)	±1% of range maximum
Apparent power (VA)	±1% of range maximum
Active energy (Wh)	Class 1 IEC 62053-21
Reactive energy (VARh)	±1% of range maximum

Features given vary from product to product - for more detailed product specific info please visit our website www.sifamtinsley.co.uk

Interfaces for External Monitoring

Two interfaces are provided:

- RS485 communication channel that can be programmed for Modbus RTU protocol
- Relay output indicating real-time measured energy.(configurable)

The Modbus configuration (baud rate etc.) and the pulse relay output assignments (kW/kVArh, import/export etc.) are configured through modbus interrogation.

Pulse Output

The meter provides two pulsed outputs, both pulsed outputs are passive type. The first pulsed output is configurable. The pulsed output can be set to read total / import / export/ kWh /kVarh. The pulse constant can be set to generate 1 pulse per: 0.001(default) /0.01/0.1/1kWh/kVarh. The second pulsed output is non-configurable. It is fixed to read total kWh.

Rate can be set to generate 1 pulse per:
0.001 = 1 Wh/VArh (default)
0.01 = 10 Wh/VArh
0.1 = 100 Wh/VArh
1 = 1 kWh/kVArh

Pulse width 200/100/60 ms.

RS485 Output for Modbus RTU

For Modbus RTU, the following RS485 communication parameters can be configured from the set-up menu:

Baud rate 1200, 2400, 4800, 9600.
Parity none (default) / odd / even
Stop bits 1 or 2
RS485 network address 3-digit number, 1 to 247

Reference Conditions of Influence Quantities

Influence Quantities are variables that affect measurement errors to a minor degree. Accuracy is verified under nominal value (within the specified tolerance) of these conditions.

Ambient temperature	23°C ±1°C
Input waveform	50Hz ±2%
Input waveform	Sinusoidal (distortion factor < 0·005)
Auxiliary supply voltage	Nominal ±1%
Auxiliary supply frequency	Nominal ±1%
Auxiliary supply waveform (if AC)	Sinusoidal (distortion factor < 0·05)
Magnetic field of external origin	Terrestrial flux

Environment

Operating temperature	-25°C to +55°C*
Storage temperature	-40°C to +70°C*
Relative humidity	0 to 95%, non-condensing
Altitude	Up to 3000m
Warm up time	1 minute
Vibration	10Hz to 50Hz, IEC 60068-2-6, 2g
Shock	30g in 3 planes

*Maximum operating and storage temperatures are in the context of typical daily and seasonal variation.

Mechanics

DIN rail dimensions	18mm x 90mm (WxH) per DIN 43880
Mounting	DIN rail (DIN 43880)
Sealing	IP51 indoor
Material	Self-extinguishing UL 94 V-0

3. Dimensions

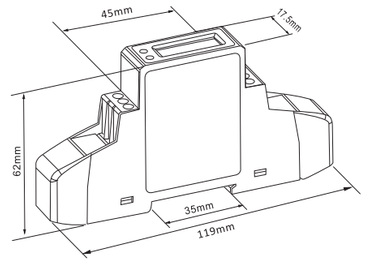

4. Wiring Diagramme

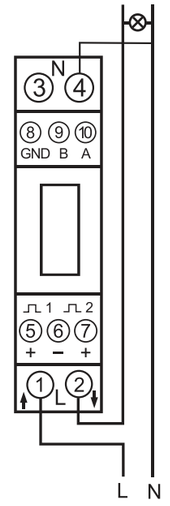

AP15-K45

Sifam Tinsleys AP15-K45 have been produced to offer a low-cost solution to metering low Amp circuits working directly connected to a maximum load 45A AC circuit. All versions of the AP15-K45 meter come with a pulsed output for remote monitoring. All AP15-K45 meters are housed in a 1U Dinrail mounted housing. They also come complete with sealable terminal covers to stop any tampering with the connections.

AP15-K45

Features

- Class B (kWh)
- 1000IMP/kWh Pulsed Output
- 1 Module Dinrail Mounted (35mm)
- Digital Backlit Display

1. Specifications

Measured Parameters

The AP15-K45 monitors and displays Imported Active Energy (kWh) of a single phase two wire (1p2w) system.

Technical Data

Operating Humidity	≤ 75%
Storage Humidity	≤ 95%
Operating Temperature	-20°C - +50°C
Storage Temperature	-30°C - +70°C
International Standard	IEC 62053-21
Accuracy Class	Class 1 IEC 62053-21
Mounting	DIN rail (DIN 43880)
Sealing	IP51 Indoor
Nominal Voltage Input	(Ph+N) 230V AC
Max Continuous Voltage	120% of nominal
AC Voltage Withstand	4KV for 1 minute
Impulse Voltage Withstand	6KV-1.2µS
Reference Input current	0.25A
Base Input Current (Ib)	5A
Maximum Input Current (Imax)	45A AC
Max Continuous Current	120% of nominal
Operational Current Range	0.4% Ib-Imax
Over current withstand	20Imax for 0.01s
Frequency	50Hz (±10%)
Power Consumption	≤ 2W/10VA/phase
Pulsed Output	1000IMP/kWh

Energy Measurements

Imported active energy	0 to 99999.99 kWh

3. Dimensions

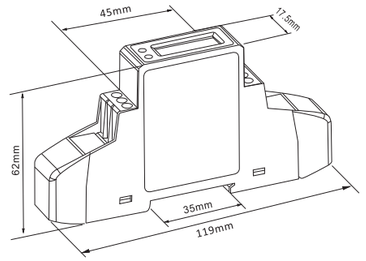

4. Wiring Diagramme

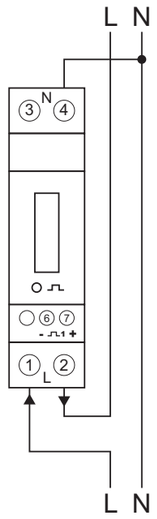

Features given vary from product to product - for more detailed product specific info please visit our website www.sifamtinsley.co.uk

AP15-1DO

Sifam Tinsleys AP15-1DO is a new generation modern design power monitor that will measure and display electrical power quality parameters. It has been engineered to cover most applications (Single Phase networks / Built in Pulse and RS485 Modbus / Import and Export kWh), replacing the need for several different models of this power meter.

The AP15-1DO is produced to the highest quality and utilizes the latest microprocessor and technology. It has a blue backlit display and 16 different measuring parameters. With built in pulsed outputs and RS485 Modbus RTU it is fully compatible for integration with BMS and remote monitoring systems.

AP15-1DO

Features

- Multifunction 100A Direct Connected
- Built In Pulsed & RS485 Modbus Outputs

1. Parameters

- Phase to Neutral voltage
- Current Max Demand
- Power Max Demand
- Import kWh
- Import kVarh
- Total kWh (Active Energy)
- Hours Run
- Frequency
- kW,kVA &kVAr
- Power Factor
- Export kWh
- Export kVArh
- Total kVarh (Reactive Energy)

2. Specifications

Measured Parameters
The unit can monitor and display the following parameters of a single phase two wire (1p2w) system.

Voltage and Current
- Phase to neutral voltages 176 to 276V a.c.
- Imin-Iref (Max) 0.5-10(100A)

This meter is certified and tested at class 1 (Accurate to within ±1%). If the meter has a load smaller than the Imin (minimum current) we cannot guarantee class 1 accuracy.

Power factor and Frequency and Max. Demand
- Frequency in Hz
- Instantaneous power:
- Power 0 to 3600 MW
- Reactive power 0 to 3600 MVAr
- Volt-amps 0 to 3600 MVA
- Maximum demanded power since last Demand reset Power factor

Energy Measurements

Imported/Exported active energy	0 to 99999.99 kWh
Imported/Exported reactive energy	0 to 99999.99 kVArh
Total active energy	0 to 99999.99 kWh
Total reactive energy	0 to 99999.99 kVArh

Measured Inputs

Voltage inputs through 2 way fixed connectors with 35mm² maximum stranded wire capacity.

Nominal Voltage Input	(Ph+N) 176 to 276V
Max Continuous Voltage	120% of nominal
Nominal Input Current	0.5-10(100)A
Max Continuous Current	120% of nominal
Nominal Input Current Burden	0.5VA
Frequency	50Hz(±10%)

Accuracy

Voltage	0·5% of range maximum
Current	0·5% of nominal
Frequency	0·2% of mid-frequency
Power factor	1% of unity (0.01)
Active power (W)	±1% of range maximum
Reactive power (VAr)	±1% of range maximum
Apparent power (VA)	±1% of range maximum
Active energy (Wh)	Class 1 IEC 62053-21
Reactive energy (VARh)	±1% of range maximum

Features given vary from product to product - for more detailed product specific info please visit our website www.sifamtinsley.co.uk

Interfaces for External Monitoring

Two interfaces are provided:
- RS485 communication channel that can be programmed for Modbus RTU protocol
- Relay output indicating real-time measured energy.(configurable)

The Modbus configuration (baud rate etc.) and the pulse relay output assignments (kW/kVArh, import/export etc.) are configured through the set-up screens

Pulse Output

The meter provides two pulsed outputs, both pulsed outputs are passive type. The first pulsed output is configurable. The pulsed output can be set to read total / import / export/ kWh /kVarh. The pulse constant can be set to generate 1 pulse per: 0.001(default) /0.01/0.1/1kWh/kVarh. The second pulsed output is non-configurable. It is fixed to read total kWh.

Rate can be set to generate 1 pulse per:
0.001 = 1 Wh/VArh (default)
0.01 = 10 Wh/VArh
0.1 = 100 Wh/VArh
1 = 1 kWh/kVArh

Pulse width 200/100/60 ms.

RS485 Output for Modbus RTU

For Modbus RTU, the following RS485 communication parameters can be configured from the set-up menu:

Baud rate 1200, 2400, 4800, 9600.
Parity none (default) / odd / even
Stop bits 1 or 2
RS485 network address 3-digit number, 1 to 247

Reference Conditions of Influence Quantities

Influence Quantities are variables that affect measurement errors to a minor degree. Accuracy is verified under nominal value (within the specified tolerance) of these conditions.

Ambient temperature	23°C ±1°C
Input waveform	50Hz ±2%
Input waveform	Sinusoidal (distortion factor < 0·005)
Auxiliary supply voltage	Nominal ±1%
Auxiliary supply frequency	Nominal ±1%
Auxiliary supply waveform (if AC)	Sinusoidal (distortion factor < 0·05)
Magnetic field of external origin	Terrestrial flux

Environment

Operating temperature Storage temperature	-25°C to +55°C* -40°C to +70°C*
Relative humidity	0 to 95%, non-condensing
Altitude	Up to 3000m
Warm up time	1 minute
Vibration	10Hz to 50Hz, IEC 60068-2-6, 2g
Shock	30g in 3 planes

*Maximum operating and storage temperatures are in the context of typical daily and seasonal variation.

Mechanics

DIN rail dimensions	mm x mm (WxH) per DIN 43880
Mounting	DIN rail (DIN 43880)
Sealing	IP51 indoor
Material	Self-extinguishing UL 94 V-0Energy Measurements

3. Dimensions

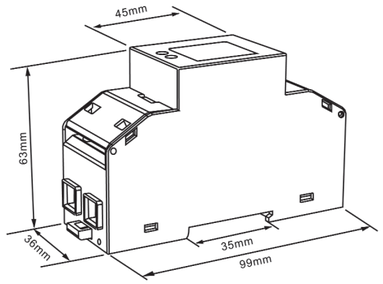

4. Installation

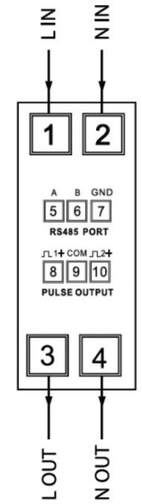

AP15-3CO

Sifam Tinsleys AP15-3CO is a new generation modern design power monitor that will measure and display electrical power quality parameters. It has been engineered to cover most applications (Single Phase and Three Phase networks / Built in Pulsed and RS485 Modbus / Import and Export kWh), replacing the need for several different models of this power meter. The AP15-3CO is produced to the highest quality and utilizes the latest microprocessor and technology. It has a blue backlit display and 16 different measuring parameters. This includes a negative power reading to indicate reversal of CT installation or connection. With built in pulsed outputs and RS485 Modbus RTU it is fully compatible for integration with BMS and remote monitoring systems.

AP15-3CO

Features

- Certified for Single & Three Phase
- Certified for Import / Export kWh

1. Parameters

- Phase to Phase Voltage (3p3w Only)
- Frequency
- Neutral Current (Calculated)
- Current Total Harmonic (THD)
- Power Max Demand
- Import kWh
- Import kVarh
- Total kWh (Active Energy)
- Phase to Neutral voltage
- Voltage Total Harmonic Distortion (THD) Current
- Current Max Demand
- kW,kVA & • kVAr
- Power Factor
- Export kWh
- Export kVArh
- Total kVarh (Reactive Energy)

2. Specifications

Measured Parameters

The unit can monitor and display the following parameters of a single phase two wire (1p2w), three phase three wire (3p3w) or three phase four wire (3p4w) system.

Voltage and Current

- Phase to neutral voltages 100 to 289V a.c. (not for 3p3w supplies).
- Voltages between phases 173 to 500V a.c. (3p supplies only).
- Percentage total voltage harmonic distortion (THD%) for each phase to N (not for 3p3w supplies).
- Percentage voltage THD% between phases (three phase supplies only).
- Current THD% for each phase

Power factor and Frequency and Max. Demand

- Frequency in Hz
- Instantaneous power:
- Power 0 to 3600 MW
- Reactive power 0 to 3600 MVAr
- Volt-amps 0 to 3600 MVA
- Maximum demanded power since last Demand reset Power factor
- Maximum neutral demand current, since the last Demand reset (for three phase supplies only)

Energy Measurements

Imported/Exported active energy	0 to 9999999.9 kWh
Imported/Exported reactive energy	0 to 9999999.9 kVArh
Total active energy	0 to 9999999.9 kWh
Total reactive energy	0 to 9999999.9 kVArh

Measured Inputs

Voltage inputs through 4-way fixed connector with 2.5mm² stranded wire capacity. single phase two wire(1p2w), three phase three wire(3p3w) or three phase four wire(3p4w) unbalanced. Line frequency measured from L1 voltage or L3 voltage. Three current inputs (six physical terminals) with 2.5mm² stranded wire capacity for connection of external CTs. Nominal rated input current 5A or 1A a.c. Rms.

Nominal Voltage Input	(Ph+N) 100 to 289V (Ph+Ph) 173 to-500V
Max Continuous Voltage	120% of nominal
Nominal Input Current	0.25-5A(6)A AC rms
Max Continuous Current	120% of nominal
Nominal Input Current Burden	0.5VA
Frequency	45-65Hz

Accuracy

Voltage	0·5% of range maximum
Current	0·5% of nominal
Frequency	0·2% of mid-frequency
Power factor	1% of unity (0.01)
Active power (W)	±1% of range maximum
Reactive power (VAr)	±1% of range maximum
Apparent power (VA)	±1% of range maximum
Active energy (Wh)	Class 1 IEC 62053-21
Reactive energy (VARh)	±1% of range maximum
Total harmonic distortion	1% up to 31st harmonic
Response time to step input	1s, typical, to >99% of final reading, at 50 Hz.

3. Dimensions

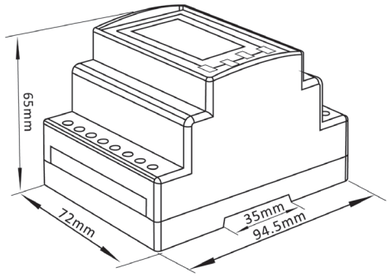

Features given vary from product to product - for more detailed product specific info please visit our website www.sifamtinsley.co.uk

Auxiliary Supply

Two-way fixed connector with 2·5mm2 stranded wire capacity. 85 to 275V a.c. 50/60Hz ±10% or 120V to 380V d.c. ±20%. Consumption <2W 10VA.

Operating range	87...275VAC ±10% / 120....380VDC ±20%

Interfaces for External Monitoring

Three interfaces are provided:

- RS485 communication channel that can be programmed for Modbus RTU protocol
- Relay output indicating real-time measured energy.(configurable)
- Pulse output 3200imp/kWh (not configurable)

The Modbus configuration (baud rate etc.) and the pulse relay output assignments (kW/kVArh, import/export etc.) are configured through the set-up screens.

Pulse Output

Opto-coupler with potential free SPST-NO Contact (Contact range 5-27VDC / Max current input: Imin 2mA and Imax 27mA DC).

The pulse output can be set to generate pulses to represent kWh or kVArh.

Rate can be set to generate 1 pulse per:
0.01 = 10 Wh/VArh
0.1 = 100 Wh/VArh
1 = 1 kWh/kVArh
10 = 10 kWh/kVArh
100 = 100 kWh/kVArh

Pulse width 200/100/60 ms.

RS485 Output for Modbus RTU

For Modbus RTU, the following RS485 communication parameters can be configured from the set-up menu:

Baud rate 2400, 4800, 9600, 19200, 38400
Parity none (default) / odd / even
Stop bits 1 or 2
RS485 network address nnn – 3-digit number, 1 to 247
Modbus™ Word order Hi/Lo byte order is set automatically to normal or reverse. It cannot be configured from the set-up menu.

Reference Conditions of Influence Quantities

Influence Quantities are variables that affect measurement errors to a minor degree. Accuracy is verified under nominal value (within the specified tolerance) of these conditions.

Ambient temperature	23°C ±1°C
Input waveform	50 or 60Hz ±2%
Input waveform	Sinusoidal (distortion factor < 0·005)
Auxiliary supply voltage	Nominal ±1%
Auxiliary supply frequency	Nominal ±1%
Auxiliary supply waveform (if AC)	Sinusoidal (distortion factor < 0·05)
Magnetic field of external origin	Terrestrial flux

Environment

Operating temperature	-25°C to +55°C*
Storage temperature	-40°C to +70°C*
Relative humidity	0 to 95%, non-condensing
Altitude	Up to 3000m
Warm up time	1 minute
Vibration	10Hz to 50Hz, IEC 60068-2-6, 2g
Shock	30g in 3 planes

Mechanics

DIN rail dimensions	72 x 94.5 mm (WxH) per DIN 43880
Mounting	DIN rail (DIN 43880)
Sealing	IP51 indoor
Material	Self-extinguishing UL 94 V-0

4. Installation

Single phase two wires

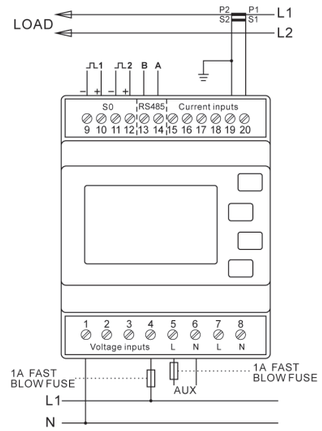

Three phase three wires

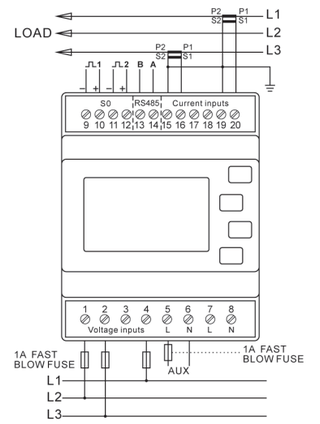

Three phase four wires

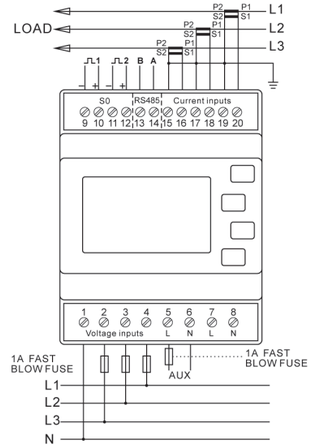

Specifications are subject to change without notice.

AP15-3DO

Sifam Tinsleys AP15-3DO is a new generation modern design power monitor that will measure and display electrical power quality parameters. It has been engineered to cover most applications (Single Phase and Three Phase networks / Built in Pulsed and RS485 Modbus / Import and Export kWh), replacing the need for several different models of this power meter.

The AP15-3DO is produced to the highest quality and utilizes the latest microprocessor and technology. It has a blue backlit display and 16 different measuring parameters. This meter supports a maximum 100A Direct connection. Available with built in pulsed outputs and RS485 Modbus RTU it is fully compatible for integration with BMS and remote monitoring systems.

AP15-3DO

Features

- Certified for Single & Three Phase
- Certified for Import / Export kWh

1. Parameters

- Phase to Phase Voltage
- Frequency
- Neutral Current (Calculated)
- Current Total Harmonic (THD) kW,kVA & kVAr
- Power Factor
- Export kWh
- Export kVArh
- Total kVarh (Reactive Energy)
- Phase to Neutral voltage
- Voltage Total Harmonic, Distortion (THD), Current
- Current Max Demand
- Power Max Demand
- Import kWh
- Import kVarh
- Total kWh (Active Energy)

2. Specifications

Measured Parameters
The unit can monitor and display the following parameters of a single phase two wire (1p2w), three phase three wire (3p3w) or three phase four wire (3p4w) system.

Voltage and Current
- Phase to neutral voltages 100 to 289V a.c. (not for 3p3w supplies).
- Voltages between phases 173 to 500V a.c. (3p supplies only).
- Percentage total voltage harmonic distortion (THD%) for each phase to N (not for 3p3w supplies).
- Percentage voltage THD% between phases (three phase supplies only).
- Current THD% for each phase

Power factor and Frequency and Max. Demand
- Frequency in Hz
- Instantaneous power:
- Power 0 to 3600 MW
- Reactive power 0 to 3600 MVAr
- Volt-amps 0 to 3600 MVA
- Maximum demanded power since last Demand reset Power factor
- Maximum neutral demand current, since the last Demand reset (for 3p4w supplies only)

Energy Measurements

Imported/Exported active energy	0 to 9999999.9 kWh
Imported/Exported reactive energy	0 to 9999999.9 kVArh
Total active energy	0 to 9999999.9 kWh
Total reactive energy	0 to 9999999.9 kVArh

Measured Inputs
Voltage inputs through 4-way fixed connector with 35mm² maximum stranded wire capacity. single phase two wire(1p2w), three phase three wire(3p3w) or three phase four wire(3p4w) unbalanced. Line frequency measured from L1 voltage or L3 voltage.

Nominal Voltage Input	(Ph+N) 100 to 289V (Ph+Ph) 173 to-500V
Max Continuous Voltage	120% of nominal
Nominal Input Current	10(100)A Direct Connected
Max Continuous Current	120% of nominal
Nominal Input Current Burden	0.5VA
Frequency	45-65Hz

Accuracy

Voltage	0·5% of range maximum
Current	0·5% of nominal
Frequency	0·2% of mid-frequency
Power factor	1% of unity (0.01)
Active power (W)	±1% of range maximum
Reactive power (VAr)	±1% of range maximum
Apparent power (VA)	±1% of range maximum
Active energy (Wh)	Class 1 IEC 62053-21
Reactive energy (VARh)	±1% of range maximum
Total harmonic distortion	1% up to 31st harmonic
Response time to step input	1s, typical, to >99% of final reading, at 50 Hz.

3. Dimensions

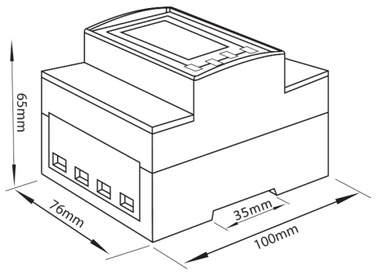

Features given vary from product to product - for more detailed product specific info please visit our website www.sifamtinsley.co.uk

Auxiliary Supply
This meter is self-supplied through internal links.

Interfaces for External Monitoring
Three interfaces are provided:
- RS485 communication channel that can be programmed for Modbus RTU protocol
- Relay output indicating real-time measured energy.(configurable)
- Pulse output 3200imp/kWh (not configurable)
- Also available as Mbus (SMARTRAIL X835-100-MID-MBUS)

The Modbus configuration (baud rate etc.) and the pulse relay output assignments (kW/kVArh, import/export etc.) are configured through the set-up screens.

Pulse Output
Opto-coupler with potential free SPST-NO Contact (Contact range 5-27VDC / Max current input: Imin 2mA and Imax 27mA DC).

The pulse output can be set to generate pulses to represent kWh or kVArh.

Rate can be set to generate 1 pulse per:
0.0025 = 2.5 Wh/VArh
0.01 = 10 Wh/VArh
0.1 = 100 Wh/VArh
1 = 1 kWh/kVArh
10 = 10 kWh/kVArh
100 = 100 kWh/kVArh

Pulse width 200/100/60 ms.

RS485 Output for Modbus RTU

For Modbus RTU, the following RS485 communication parameters can be configured from the set-up menu:

Baud rate 2400, 4800, 9600, 19200, 38400
Parity none (default) / odd / even
Stop bits 1 or 2
RS485 network address 3-digit number, 1 to 247
Modbus™ Word order Hi/Lo byte order is set automatically to normal or reverse. It cannot be configured from the set-up menu.

Reference Conditions of Influence Quantities

Influence Quantities are variables that affect measurement errors to a minor degree. Accuracy is verified under nominal value (within the specified tolerance) of these conditions.

Ambient temperature	23°C ±1°C
Input waveform	50 or 60Hz ±2%
Input waveform	Sinusoidal (distortion factor < 0·005)
Auxiliary supply voltage	Nominal ±1%
Auxiliary supply frequency	Nominal ±1%
Auxiliary supply waveform (if AC)	Sinusoidal (distortion factor < 0·05)
Magnetic field of external origin	Terrestrial flux

Environment

Operating temperature	-25°C to +55°C*
Storage temperature	-40°C to +70°C*
Relative humidity	0 to 95%, non-condensing
Altitude	Up to 3000m
Warm up time	1 minute
Vibration	10Hz to 50Hz, IEC 60068-2-6, 2g
Shock	30g in 3 planes

*Maximum operating and storage temperatures are in the context of typical daily and seasonal variation.

Mechanics

DIN rail dimensions	76 x 100 mm (WxH) per DIN 43880
Mounting	DIN rail (DIN 43880)
Sealing	IP51 indoor
Material Self-extinguishing	UL 94 V-0

4. Installation

Single phase two wires

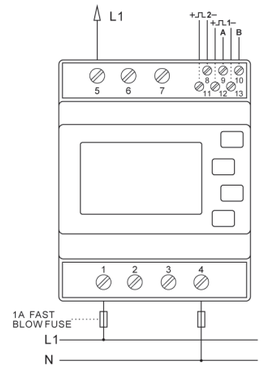

Three phase three wires

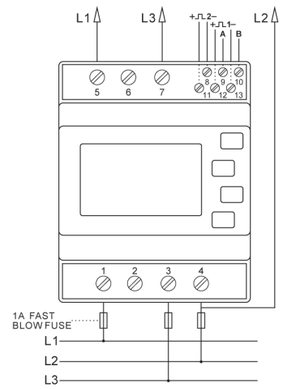

Three phase four wires

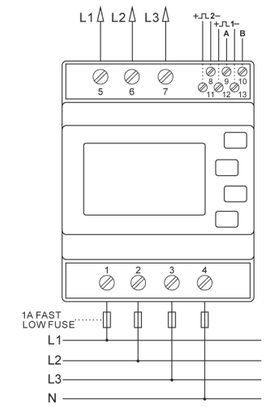

Specifications are subject to change without notice.

AP15-3CO-BI

AP253-CO-BI

Features

- Class 1 Accuracy
- Dual Pulsed Output
- 4 Module Dinrail Mounted (35mm)
- CT Operated

Sifam Tinsleys AP15-3CO-BI series is digital three phase 4 wire energy meter with a white back-lighted LCD screen for perfect reading. It provides an economical solution for active energy and active power measurement in three phase applications. It is high accurate, durable and reliable. AP15-3CO-BI provides a separate register for resettable energy, which allows use to monitor the energy consumption happens in a certain period. AP15-3CO-BI measures both import and export energy, is an ideal product for bi-directional applications..

The AP15-3CO-BI measures and displays Total Active Energy of a three phase circuit. The unit has a built in pulsed output as well for remote monitoring.

1. Safety Instructions

The following safety instructions apply to all versions of the AP15-3CO-BI range of power meters:

Information for your own safety
necessitate further measures. However, it does contain information which must be read for your personal safety and to avoid material damages. This information is highlighted by a warning triangle and is represented as follows, depending on the degree of potential danger.

Qualified personnel
Operation of the equipment described in this manual may only be performed by qualified personnel. Qualified personnel means a person who has been authorised to commission, start up, ground and label devices, systems and circuits according to Safety and Regulatory standards.

Use for the intended purpose
The equipment must only be used for the application specified in the datasheet and the user manual.

Proper handling
The prerequisites for areliable operation of the product are proper transport, storage, installation and assembly, as well as proper operation and maintenance. When operating electrical equipment, certain parts of the equipment automatically carry dangerous voltages. Improper handling can therefore result in serious injuries or material damage. Use only insulating tools.

Do not connect while circuit is live (hot). Place the meter only in dry surroundings. Do not mount the meter in an explosive area or expose the meter to dust, mildew and insects. Make sure the used wires are suitable for the maximum current of this meter. Make sure the AC wires are connected correctly before activating the current/voltage to the meter. Do not touch the meter connecting clamps directly with your bare hands, with metal, blank wire or other material as you may get an electrical shock.

Make sure the protection cover is placed after installation. Installation, maintenance and reparation should only be done by qualified personnel. Never break the seals and open the front cover as this might influence the functionality of the meter, and will avoid any warranty. Do not drop, or allow physical impact to the meter as there are high precision components inside that may break.

Features given vary from product to product - for more detailed product specific info please visit our website www.sifamtinsley.co.uk

AP15-3CO-BI Digital Power Meter - Three Phase

Measured Parameters
The AP15-3CO-BI monitors and displays Total Active Energy (kWh) of a three phase four wire (3p4w) system.

Technical Data

Operating Humidity	≤ 75%
Storage Humidity	≤ 95%
Operating Temperature	-20°C - +50°C
Storage Temperature	-30°C - +70°C
International Standard	IEC 62053-21
Accuracy Class	1
Mounting	DIN rail (DIN 43880)
Sealing	IP51 Indoor
Nominal Voltage Input	(Ph+N) 100 to 289V (Ph+Ph) 173 to-500V
Max Continuous Voltage	120% of nominal
AC Voltage Withstand	4KV for 1 minute
Impulse Voltage Withstand	6KV-1.2µS
Nominal Input Current	0.25-5A(6)A AC rms
Max Continuous Current	120% of nominal
Nominal Input Current Burden	0.5VA
Frequency	50Hz/60Hz (±10%)
Power Consumption	≤ 2W/10VA/phase
Pulsed Output	1000imp/kWh

2. Dimensions

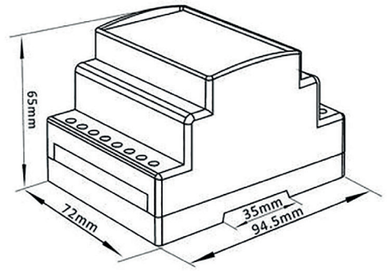

3. Wiring Diagram

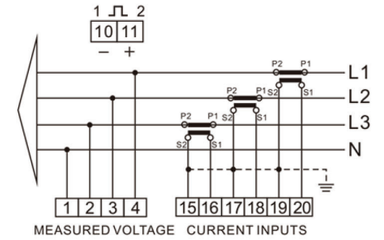

AP25-3DO-BI
Three Phase Power Meter

AP253-CO-BI

Features

- Class 1 Accuracy
- Dual Pulsed Output
- Straight-Through Connection
- 4 Module Dinrail Mounted (35mm)

The AP25-3DO-Bi Digital Power Meter works directly connected to a maximum load 100A AC circuit eradicating the need for current transformers.

The AP25-3DO-Bi displays Total, Import, Export and Partial Active Energy, as well as Instantaneous Active Power. The Partial Active Energy provided is resettable so the user can monitor the energy imported and energy exported during a certain time-period.

1. Safety Instructions

The following safety instructions apply to all versions of the AP25-3DO-Birange of power meters:

Information for your own safety

This manual does not contain all of the safety measures for operation of the equipment (module, device) because special operating conditions, and local code requirements or regulations may necessitate further measures. However, it does contain information which must be read for your personal safety and to avoid material damages. This information is highlighted by a warning triangle and is represented as follows, depending on the degree of potential danger.

Qualified personnel

Operation of the equipment described in this manual may only be performed by qualified personnel. Qualified personnel means a person who has been authorised to commission, start up, ground and label devices, systems and circuits according to Safety and Regulatory standards.

Use for the intended purpose

The equipment must only be used for the application specified in the datasheet and the user manual.

Proper handling

The prerequisites for areliable operation of the product are proper transport, storage, installation and assembly, as well as proper operation and maintenance. When operating electrical equipment, certain parts of the equipment automatically carry dangerous voltages. Improper handling can therefore result in serious injuries or material damage. Use only insulating tools. Do not connect while circuit is live (hot). Place the meter only in dry surroundings. Do not mount the meter in an explosive area or expose the meter to dust, mildew and insects. Make sure the used wires are suitable for the maximum current of this meter. Make sure the AC wires are connected correctly before activating the current/voltage to the meter. Do not connect the meter to a 3 phase - 400VAC - network. Do not touch the meter connecting clamps directly with your bare hands, with metal, blank wire or other material as you may get an electrical shock. Make sure the protection cover is placed after installation. Installation, maintenance and reparation should only be done by qualified personnel. Never break the seals and open the front cover as this might influence the functionality of the meter, and will avoid any warranty. Do not drop, or allow physical impact to the meter as there are high precision components inside that may break.

Features given vary from product to product - for more detailed product specific info please visit our website www.sifamtinsley.co.uk

AP25-3DO-BI Digital Power Meter - Three Phase

Measured Parameters

The AP25-3DO-Bimonitors and displays Total, Imported, Exported and Partial Active Energy (kWh) as well as Instantaneous Active Power (kW) of a three phase three wire (3p3w) or a three phase four wire (3p4w) system.

Technical Data

Operating Humidity	≤ 75%
Storage Humidity	≤ 95%
Operating Temperature	-20°C - +50°C
Storage Temperature	-30°C - +70°C
International Standard	IEC 62053-21
Accuracy Class	1
Mounting	DIN rail (DIN 43880)
Sealing	IP51 Indoor
Nominal Voltage Input	(Ph+N) 100 to 289V (Ph+Ph) 173 to-500V
Max Continuous Voltage	120% of nominal
AC Voltage Withstand	4KV for 1 minute
Impulse Voltage Withstand	6KV-1.2 S
Reference Input current	0.5A
Base Input Current (Ib)	10A
Maximum Input Current (Imax)	100A AC
Max Continuous Current	120% of nominal
Operational Current Range	0.4% Ib-Imax
Over current withstand	20Imax for 0.01s
Nominal Input Current Burden	0.5VA
Frequency	50Hz(±10%)
Power Consumption	≤ 2W/10VA/phase
Pulsed Output	1000imp/kWh

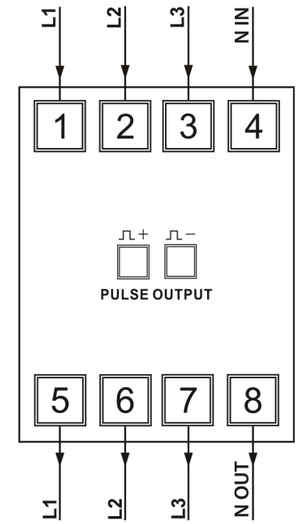

2. Dimensions

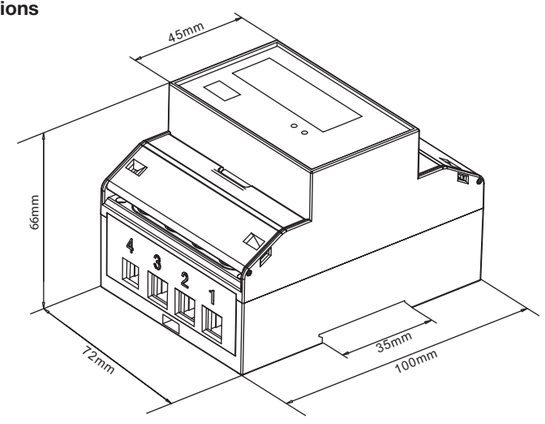

AP25-1DO

Sifam Tinsleys AP25-1DO is a new generation modern design power monitor that will measure and display electrical power quality parameters. It has been engineered to cover most applications (Single Phase networks / Built in Pulse and RS485 Modbus / Import and Export kWh), replacing the need for several different models of this power meter.

As the demand for MID certified meters has increased, we have obtained annex B and D of the EC Directive 2004/22/EC. This power meter has been tested and certified for single phase networks and import and export active energy (kWh).

The AP25-1DO is produced to the highest quality and utilizes the latest microprocessor and technology. It has a blue backlit display and 16 different measuring parameters. With built in pulsed outputs and RS485 Modbus RTU it is fully compatible for integration with BMS and remote monitoring systems.

AP25-1DO

Features

- MID B+D Certified
- Class B (kWh) EC Directive 2004/22/EC
- Certificate Number 0120/SGS0198
- Multifunction 100A Direct Connected
- Built In Pulsed & RS485 Modbus Outputs

1. Parameters

- Phase to Neutral voltage
- Current Max Demand
- Power Max Demand
- Import kWh
- Import kVarh
- Total kWh (Active Energy)
- Hours Run
- Frequency
- kW,kVA & • kVAr
- Power Factor
- Export kWh
- Export kVArh
- Total kVarh (Reactive Energy)

2. Specifications

Measured Parameters
The unit can monitor and display the following parameters of a single phase two wire (1p2w) system.

Voltage and Current
- Phase to neutral voltages 176 to 276V a.c.
- Imin-Iref (Max) 0.5-10(100A)

This meter is certified and tested at class 1 (Accurate to within ±1%). If the meter has a load smaller than the Imin (minimum current) we cannot guarantee class 1 accuracy.

Power factor and Frequency and Max. Demand
- Frequency in Hz
- Instantaneous power:
- Power 0 to 3600 MW
- Reactive power 0 to 3600 MVAr
- Volt-amps 0 to 3600 MVA
- Maximum demanded power since last Demand reset Power factor

Energy Measurements

Imported/Exported active energy	0 to 99999.99 kWh
Imported/Exported reactive energy	0 to 99999.99 kVArh
Total active energy	0 to 99999.99 kWh
Total reactive energy	0 to 99999.99 kVArh

Measured Inputs

Voltage inputs through 2 way fixed connectors with 35mm² maximum stranded wire capacity.

Nominal Voltage Input	(Ph+N) 176 to 276V
Max Continuous Voltage	120% of nominal
Nominal Input Current	0.5-10(100)A
Max Continuous Current	120% of nominal
Nominal Input Current Burden	0.5VA
Frequency	50Hz(±10%)

Accuracy

Voltage	0·5% of range maximum
Current	0·5% of nominal
Frequency	0·2% of mid-frequency
Power factor	1% of unity (0.01)
Active power (W)	±1% of range maximum
Reactive power (VAr)	±1% of range maximum
Apparent power (VA)	±1% of range maximum
Active energy (Wh)	Class 1 IEC 62053-21
Reactive energy (VARh)	±1% of range maximum

Features given vary from product to product - for more detailed product specific info please visit our website www.sifamtinsley.co.uk

Interfaces for External Monitoring

Two interfaces are provided:
- RS485 communication channel that can be programmed for Modbus RTU protocol
- Relay output indicating real-time measured energy.(configurable)

The Modbus configuration (baud rate etc.) and the pulse relay output assignments (kW/kVArh, import/export etc.) are configured through the set-up screens

Pulse Output

The meter provides two pulsed outputs, both pulsed outputs are passive type. The first pulsed output is configurable. The pulsed output can be set to read total / import / export/ kWh /kVarh. The pulse constant can be set to generate 1 pulse per: 0.001(default) /0.01/0.1/1kWh/kVarh. The second pulsed output is non-configurable. It is fixed to read total kWh.

Rate can be set to generate 1 pulse per:
0.001 = 1 Wh/VArh (default)
0.01 = 10 Wh/VArh
0.1 = 100 Wh/VArh
1 = 1 kWh/kVArh

Pulse width 200/100/60 ms.

RS485 Output for Modbus RTU

For Modbus RTU, the following RS485 communication parameters can be configured from the set-up menu:

Baud rate 1200, 2400, 4800, 9600.
Parity none (default) / odd / even
Stop bits 1 or 2
RS485 network address 3-digit number, 1 to 247

Reference Conditions of Influence Quantities

Influence Quantities are variables that affect measurement errors to a minor degree. Accuracy is verified under nominal value (within the specified tolerance) of these conditions.

Ambient temperature	23°C ±1°C
Input waveform	50Hz ±2%
Input waveform	Sinusoidal (distortion factor < 0·005)
Auxiliary supply voltage	Nominal ±1%
Auxiliary supply frequency	Nominal ±1%
Auxiliary supply waveform (if AC)	Sinusoidal (distortion factor < 0·05)
Magnetic field of external origin	Terrestrial flux

Environment

Operating temperature	-25°C to +55°C*
Storage temperature	-40°C to +70°C*
Relative humidity	0 to 95%, non-condensing
Altitude	Up to 3000m
Warm up time	1 minute
Vibration	10Hz to 50Hz, IEC 60068-2-6, 2g
Shock	30g in 3 planes

*Maximum operating and storage temperatures are in the context of typical daily and seasonal variation.

Mechanics

DIN rail dimensions	mm x mm (WxH) per DIN 43880
Mounting	DIN rail (DIN 43880)
Sealing	IP51 indoor
Material	Self-extinguishing UL 94 V-0Energy Measurements

3. Dimensions

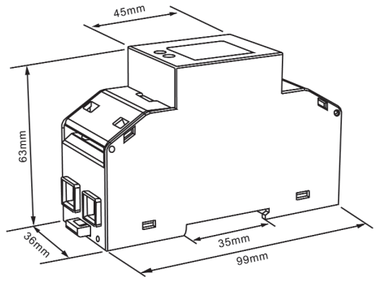

4. Installation

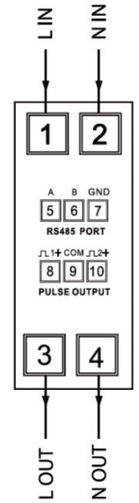

AP25-3CO

AP25-3CO

Features

- MID B+D Certified
- Certificate Number 0120/SGS0150
- Class B (kWh) EC Directive 2004/22/EC
- Certified for Single & Three Phase
- Certified for Import / Export kWh

Sifam Tinsleys AP25-3CO is a new generation modern design power monitor that will measure and display electrical power quality parameters. It has been engineered to cover most applications (Single Phase and Three Phase networks / Built in Pulsed and RS485 Modbus / Import and Export kWh), replacing the need for several different models of this power meter. As the demand for MID certified meters has increased, we have obtained annex B and D of the EC Directive 2004/22/EC. This power meter has been tested and certified for single or three phase networks and import and export active energy (kWh).

The AP25-3CO is produced to the highest quality and utilizes the latest microprocessor and technology. It has a blue backlit display and 16 different measuring parameters. This includes a negative power reading to indicate reversal of CT installation or connection. With built in pulsed outputs and RS485 Modbus RTU it is fully compatible for integration with BMS and remote monitoring systems.

1. Parameters

- Phase to Phase Voltage (3p3w Only)
- Frequency
- Neutral Current (Calculated)
- Current Total Harmonic (THD)
- Power Max Demand
- Import kWh
- Import kVarh
- Total kWh (Active Energy)
- Phase to Neutral voltage
- Voltage Total Harmonic Distortion (THD) Current
- Current Max Demand
- kW,kVA & kVAr
- Power Factor
- Export kWh
- Export kVArh
- Total kVarh (Reactive Energy)

2. Specifications

Measured Parameters

The unit can monitor and display the following parameters of a single phase two wire (1p2w), three phase three wire (3p3w) or three phase four wire (3p4w) system.

Voltage and Current

- Phase to neutral voltages 100 to 289V a.c. (not for 3p3w supplies).
- Voltages between phases 173 to 500V a.c. (3p supplies only).
- Percentage total voltage harmonic distortion (THD%) for each phase to N (not for 3p3w supplies).
- Percentage voltage THD% between phases (three phase supplies only).
- Current THD% for each phase

Power factor and Frequency and Max. Demand

- Frequency in Hz
- Instantaneous power:
- Power 0 to 3600 MW
- Reactive power 0 to 3600 MVAr
- Volt-amps 0 to 3600 MVA
- Maximum demanded power since last Demand reset Power factor
- Maximum neutral demand current, since the last Demand reset (for three phase supplies only)

Energy Measurements

Imported/Exported active energy	0 to 9999999.9 kWh
Imported/Exported reactive energy	0 to 9999999.9 kVArh
Total active energy	0 to 9999999.9 kWh
Total reactive energy	0 to 9999999.9 kVArh

Measured Inputs

Voltage inputs through 4-way fixed connector with 2.5mm² stranded wire capacity. single phase two wire(1p2w), three phase three wire(3p3w) or three phase four wire(3p4w) unbalanced. Line frequency measured from L1 voltage or L3 voltage. Three current inputs (six physical terminals) with 2.5mm² stranded wire capacity for connection of external CTs. Nominal rated input current 5A or 1A a.c. Rms.

Nominal Voltage Input	(Ph+N) 100 to 289V (Ph+Ph) 173 to-500V
Max Continuous Voltage	120% of nominal
Nominal Input Current	0.25-5A(6)A AC rms
Max Continuous Current	120% of nominal
Nominal Input Current Burden	0.5VA
Frequency	45-65Hz

Accuracy

Voltage	0·5% of range maximum
Current	0·5% of nominal
Frequency	0·2% of mid-frequency
Power factor	1% of unity (0.01)
Active power (W)	±1% of range maximum
Reactive power (VAr)	±1% of range maximum
Apparent power (VA)	±1% of range maximum
Active energy (Wh)	Class 1 IEC 62053-21
Reactive energy (VARh)	±1% of range maximum
Total harmonic distortion	1% up to 31st harmonic
Response time to step input	1s, typical, to >99% of final reading, at 50 Hz.

3. Dimensions

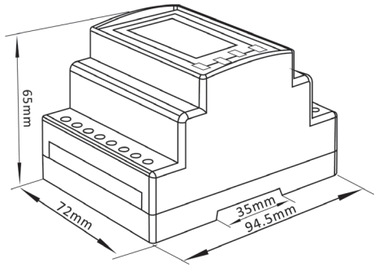

Features given vary from product to product - for more detailed product specific info please visit our website www.sifamtinsley.co.uk

Auxiliary Supply

Two-way fixed connector with 2·5mm2 stranded wire capacity. 85 to 275V a.c. 50/60Hz ±10% or 120V to 380V d.c. ±20%. Consumption <2W 10VA.

Operating range	87...275VAC ±10% / 120....380VDC ±20%

Interfaces for External Monitoring

Three interfaces are provided:

- RS485 communication channel that can be programmed for Modbus RTU protocol
- Relay output indicating real-time measured energy.(configurable)
- Pulse output 3200imp/kWh (not configurable)

The Modbus configuration (baud rate etc.) and the pulse relay output assignments (kW/kVArh, import/export etc.) are configured through the set-up screens.

Pulse Output

Opto-coupler with potential free SPST-NO Contact (Contact range 5-27VDC / Max current input: Imin 2mA and Imax 27mA DC).

The pulse output can be set to generate pulses to represent kWh or kVArh.

Rate can be set to generate 1 pulse per:
0.01 = 10 Wh/VArh
0.1 = 100 Wh/VArh
1 = 1 kWh/kVArh
10 = 10 kWh/kVArh
100 = 100 kWh/kVArh

Pulse width 200/100/60 ms.

RS485 Output for Modbus RTU

For Modbus RTU, the following RS485 communication parameters can be configured from the set-up menu:

Baud rate 2400, 4800, 9600, 19200, 38400
Parity none (default) / odd / even
Stop bits 1 or 2
RS485 network address nnn – 3-digit number, 1 to 247
Modbus™ Word order Hi/Lo byte order is set automatically to normal or reverse. It cannot be configured from the set-up menu.

Reference Conditions of Influence Quantities

Influence Quantities are variables that affect measurement errors to a minor degree. Accuracy is verified under nominal value (within the specified tolerance) of these conditions.

Ambient temperature	23°C ±1°C
Input waveform	50 or 60Hz ±2%
Input waveform	Sinusoidal (distortion factor < 0·005)
Auxiliary supply voltage	Nominal ±1%
Auxiliary supply frequency	Nominal ±1%
Auxiliary supply waveform (if AC)	Sinusoidal (distortion factor < 0·05)
Magnetic field of external origin	Terrestrial flux

Environment

Operating temperature	-25°C to +55°C*
Storage temperature	-40°C to +70°C*
Relative humidity	0 to 95%, non-condensing
Altitude	Up to 3000m
Warm up time	1 minute
Vibration	10Hz to 50Hz, IEC 60068-2-6, 2g
Shock	30g in 3 planes

Mechanics

DIN rail dimensions	72 x 94.5 mm (WxH) per DIN 43880
Mounting	DIN rail (DIN 43880)
Sealing	IP51 indoor
Material	Self-extinguishing UL 94 V-0

4. Installation

Single phase two wires

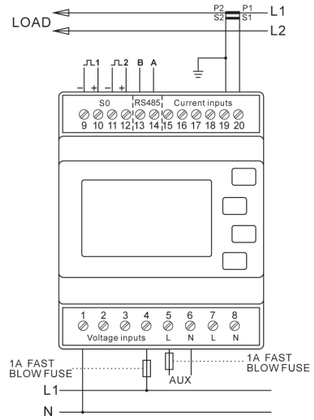

Three phase three wires

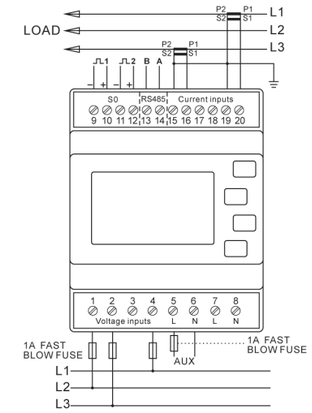

Three phase four wires

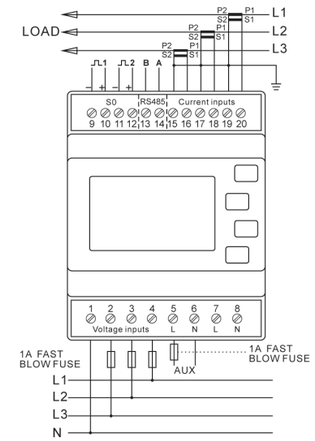

Specifications are subject to change without notice.

AP25-3DO

Sifam Tinsleys AP25-3DO is a new generation modern design power monitor that will measure and display electrical power quality parameters. It has been engineered to cover most applications (Single Phase and Three Phase networks / Built in Pulsed and RS485 Modbus / Import and Export kWh), replacing the need for several different models of this power meter.

As the demand for MID certified meters has increased, we have obtained annex B and D of the EC Directive 2004/22/EC. This power meter has been tested and certified for single or three phase networks and import and export active energy (kWh).

The AP25-3DO is produced to the highest quality and utilizes the latest microprocessor and technology. It has a blue backlit display and 16 different measuring parameters. This meter supports a maximum 100A Direct connection. Available with built in pulsed outputs and RS485 Modbus RTU it is fully compatible for integration with BMS and remote monitoring systems.

AP25-3DO

Features

- MID B+D Certified
- Certificate Number 0120/SGS0151
- Class B (kWh) EC Directive 2004/22/EC
- Certified for Single & Three Phase
- Certified for Import / Export kWh

1. Parameters

- Phase to Phase Voltage
- Frequency
- Neutral Current (Calculated)
- Current Total Harmonic (THD) kW,kVA & kVAr
- Power Factor
- Export kWh
- Export kVArh
- Total kVarh (Reactive Energy)
- Phase to Neutral voltage
- Voltage Total Harmonic, Distortion (THD), Current
- Current Max Demand
- Power Max Demand
- Import kWh
- Import kVarh
- Total kWh (Active Energy)

2. Specifications

Measured Parameters

The unit can monitor and display the following parameters of a single phase two wire (1p2w), three phase three wire (3p3w) or three phase four wire (3p4w) system.

Voltage and Current

- Phase to neutral voltages 100 to 289V a.c. (not for 3p3w supplies).
- Voltages between phases 173 to 500V a.c. (3p supplies only).
- Percentage total voltage harmonic distortion (THD%) for each phase to N (not for 3p3w supplies).
- Percentage voltage THD% between phases (three phase supplies only).
- Current THD% for each phase

Power factor and Frequency and Max. Demand

- Frequency in Hz
- Instantaneous power:
- Power 0 to 3600 MW
- Reactive power 0 to 3600 MVAr
- Volt-amps 0 to 3600 MVA
- Maximum demanded power since last Demand reset Power factor
- Maximum neutral demand current, since the last Demand reset (for 3p4w supplies only)

Energy Measurements

Imported/Exported active energy	0 to 9999999.9 kWh
Imported/Exported reactive energy	0 to 9999999.9 kVArh
Total active energy	0 to 9999999.9 kWh
Total reactive energy	0 to 9999999.9 kVArh

Measured Inputs

Voltage inputs through 4-way fixed connector with 35mm² maximum stranded wire capacity. single phase two wire(1p2w), three phase three wire(3p3w) or three phase four wire(3p4w) unbalanced. Line frequency measured from L1 voltage or L3 voltage.

Nominal Voltage Input	(Ph+N) 100 to 289V (Ph+Ph) 173 to-500V
Max Continuous Voltage	120% of nominal
Nominal Input Current	10(100)A Direct Connected
Max Continuous Current	120% of nominal
Nominal Input Current Burden	0.5VA
Frequency	45-65Hz

Accuracy

Voltage	0·5% of range maximum
Current	0·5% of nominal
Frequency	0·2% of mid-frequency
Power factor	1% of unity (0.01)
Active power (W)	±1% of range maximum
Reactive power (VAr)	±1% of range maximum
Apparent power (VA)	±1% of range maximum
Active energy (Wh)	Class 1 IEC 62053-21
Reactive energy (VARh)	±1% of range maximum
Total harmonic distortion	1% up to 31st harmonic
Response time to step input	1s, typical, to >99% of final reading, at 50 Hz.

3. Dimensions

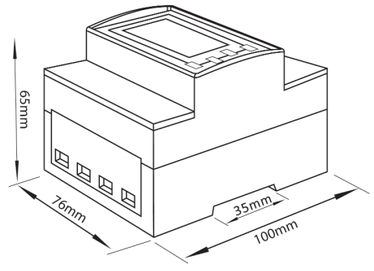

All dimensions are in mm

Features given vary from product to product - for more detailed product specific info please visit our website www.sifamtinsley.co.uk

Auxiliary Supply

This meter is self-supplied through internal links.

Interfaces for External Monitoring

Three interfaces are provided:

- RS485 communication channel that can be programmed for Modbus RTU protocol
- Relay output indicating real-time measured energy.(configurable)
- Pulse output 3200imp/kWh (not configurable)
- Also available as Mbus (SMARTRAIL X835-100-MID-MBUS)

The Modbus configuration (baud rate etc.) and the pulse relay output assignments (kW/kVArh, import/export etc.) are configured through the set-up screens.

Pulse Output

Opto-coupler with potential free SPST-NO Contact (Contact range 5-27VDC / Max current input: Imin 2mA and Imax 27mA DC).

The pulse output can be set to generate pulses to represent kWh or kVArh.

Rate can be set to generate 1 pulse per:
0.0025 = 2.5 Wh/VArh
0.01 = 10 Wh/VArh
0.1 = 100 Wh/VArh
1 = 1 kWh/kVArh
10 = 10 kWh/kVArh
100 = 100 kWh/kVArh

Pulse width 200/100/60 ms.

RS485 Output for Modbus RTU

For Modbus RTU, the following RS485 communication parameters can be configured from the set-up menu:

Baud rate 2400, 4800, 9600, 19200, 38400
Parity none (default) / odd / even
Stop bits 1 or 2
RS485 network address 3-digit number, 1 to 247
Modbus™ Word order Hi/Lo byte order is set automatically to normal or reverse. It cannot be configured from the set-up menu.

Reference Conditions of Influence Quantities

Influence Quantities are variables that affect measurement errors to a minor degree. Accuracy is verified under nominal value (within the specified tolerance) of these conditions.

Ambient temperature	23°C ±1°C
Input waveform	50 or 60Hz ±2%
Input waveform	Sinusoidal (distortion factor < 0·005)
Auxiliary supply voltage	Nominal ±1%
Auxiliary supply frequency	Nominal ±1%
Auxiliary supply waveform (if AC)	Sinusoidal (distortion factor < 0·05)
Magnetic field of external origin	Terrestrial flux

Environment

Operating temperature	-25°C to +55°C*
Storage temperature	-40°C to +70°C*
Relative humidity	0 to 95%, non-condensing
Altitude	Up to 3000m
Warm up time	1 minute
Vibration	10Hz to 50Hz, IEC 60068-2-6, 2g
Shock	30g in 3 planes

*Maximum operating and storage temperatures are in the context of typical daily and seasonal variation.

Mechanics

DIN rail dimensions	76 x 100 mm (WxH) per DIN 43880
Mounting	DIN rail (DIN 43880)
Sealing	IP51 indoor
Material Self-extinguishing	UL 94 V-0

4. Installation

Single phase two wires

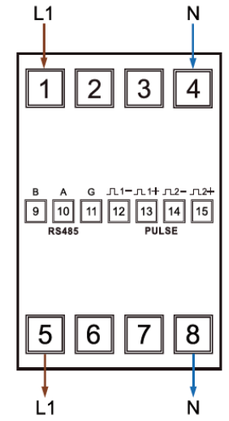

Three phase three wires

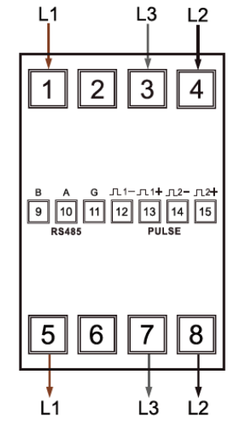

Three phase four wires

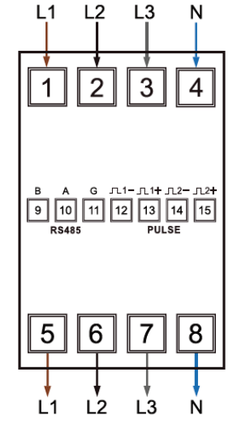

Specifications are subject to change without notice.

AP15-3DL RJ12

Sifam Tinsleys AP15-3DL RJ12 Multifunction Power Meter is a new generation modern design power monitor that will measure and display electrical power quality parameters for two three phase circuits. This replaces the use of two separate meters, this has been designed specifically for a split load board where power and lighting has to be measured separately due to building regulations. It has been engineered to cover most applications (Three Phase networks / Built in RS485 Modbus / Import and Export kWh), replacing the need for several different models of this power meter.

The Sifam Tinsley AP15-3DL RJ12 is produced to the highest quality and utilizes the latest microprocessor and technology. It has a backlit display and 16 different measuring parameters. This includes a negative power reading to indicate reversal of CT installation or connection. With built in pulsed outputs and RS485 Modbus RTU it is fully compatible for integration with BMS and remote monitoring systems.

This specific model from the Sifam Tinsley RJ range is configured to work in conjunction with our RJ12 fast connect CT's.

AP15-3DL RJ12

Features

- Phase to Neutral Voltage (V)
- Phase Current (A)
- Voltage Total Harmonic Distortion (U%THD)
- Current Total Harmonic Distortion (I%THD)
- Frequency (Hz)
- Power Factor (PF)
- Current Max Demand (MD A)
- Power Max Demand (MD kW)
- Active Power (kW) Reactive Power (kVAr)
- Apparent Power (kVA)
- Import Active Energy (kWh)
- Export Active Energy (kWh)
- Total Active Energy (kWh)
- Import Reactive Energy (kVArh)
- Export Reactive Energy (kVArh)
- Total Reactive Energy (kVArh)

Features given vary from product to product - for more detailed product specific info please visit our website www.sifamtinsley.co.uk

1. Specifications

Measured Parameters

The unit can monitor and display the following parameters of a single phase two wire (1p2w) or three phase four wire (3p4w) systems.

Voltage and Current

- Phase to neutral voltages 100 to 289V a.c. (not for 3p3w supplies).
- Voltages between phases 173 to 500V a.c. (3p supplies only).
- Percentage total voltage harmonic distortion (THD%) for each phase to N (not for 3p3w supplies).
- Percentage voltage THD% between phases (three phase supplies only).
- Current THD% for each phase

Power factor and Frequency and Max. Demand

- Frequency in Hz
- Instantaneous power:
- Power 0 to 3600 MW
- Reactive power 0 to 3600 MVAr
- Volt-amps 0 to 3600 MVA
- Maximum demanded power since last Demand reset Power factor
- Maximum neutral demand current, since the last Demand reset (for three phase supplies only)

Energy Measurements

Imported/Exported active energy	0 to 9999999.9 kWh
Imported/Exported reactive energy	0 to 9999999.9 kVArh
Total active energy	0 to 9999999.9 kWh
Total reactive energy	0 to 9999999.9 kVArh

Measured Inputs

Voltage inputs through 4-way fixed connector with 2.5mm² stranded wire capacity. single phase two wire(1p2w) or three phase four wire(3p4w) unbalanced. Line frequency measured from L1 voltage or L3 voltage. Three or Six Current inputs for connection of external CTs with RJ12 cable. Nominal rated input Current 100mA AC RMS per Phase.

Nominal Voltage Input (Ph+N)	100 to 289V (Ph+Ph) 173 to-500V
Max Continuous Voltage	120% of nominal
Nominal Input Current	2 X 10-100 (120mA)
Max Continuous Current	120% of nominal
Nominal Input Current Burden	0.5VA
Frequency	45-65Hz

Accuracy

Voltage	0·5% of range maximum
Current	0·5% of nominal
Frequency	0·2% of mid-frequency
Power factor	1% of unity (0.01)
Active power (W)	±1% of range maximum
Reactive power (VAr)	±1% of range maximum
Apparent power (VA)	±1% of range maximum
Active energy (Wh)	Class 1 IEC 62053-21
Reactive energy (VARh)	±1% of range maximum
Total harmonic distortion	1% up to 31st harmonic
Response time to step input	1s, typical, to >99% of final reading, at 50 Hz.

Interfaces for External Monitoring

Three interfaces are provided:

- RS485 communication channel that can be programmed for Modbus RTU protocol

RS485 Output for Modbus RTU

For Modbus RTU, the following RS485 communication parameters can be configured from the set-up menu:

Baud rate 2400, 4800, 9600, 19200, 38400
Parity none (default) / odd / even
Stop bits 1 or 2
RS485 network address nnn – 3-digit number, 1 to 247

Modbus™ Word order Hi/Lo byte order is set automatically to normal or reverse. It cannot be configured from the set-up menu.

Reference Conditions of Influence Quantities

Influence Quantities are variables that affect measurement errors to a minor degree. Accuracy is verified under nominal value (within the specified tolerance) of these conditions.

Ambient temperature	23°C ±1°C
Input waveform	50 or 60Hz ±2%
Input waveform	Sinusoidal (distortion factor < 0·005)
Auxiliary supply voltage	Nominal ±1%
Auxiliary supply frequency	Nominal ±1%
Auxiliary supply waveform (if AC)	Sinusoidal (distortion factor < 0·05)
Magnetic field of external origin	Terrestrial flux

Environment

Operating temperature	-25°C to +55°C*
Storage temperature	-40°C to +70°C*
Relative humidity	0 to 95%, non-condensing
Altitude	Up to 3000m
Warm up time	1 minute
Vibration	10Hz to 50Hz, IEC 60068-2-6, 2g
Shock	30g in 3 planes

*Maximum operating and storage temperatures are in the context of typical daily and seasonal variation.

Mechanics

DIN rail dimensions	72 x 94.5 mm (WxH) per DIN 43880
Mounting	DIN rail (DIN 43880)
Sealing	IP51 indoor
Material	Self-extinguishing UL 94 V-0

2. Dimensions

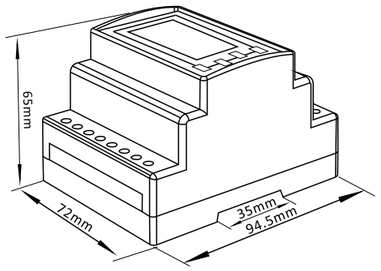

3. Installation

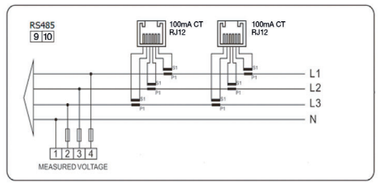

Installation 1.2

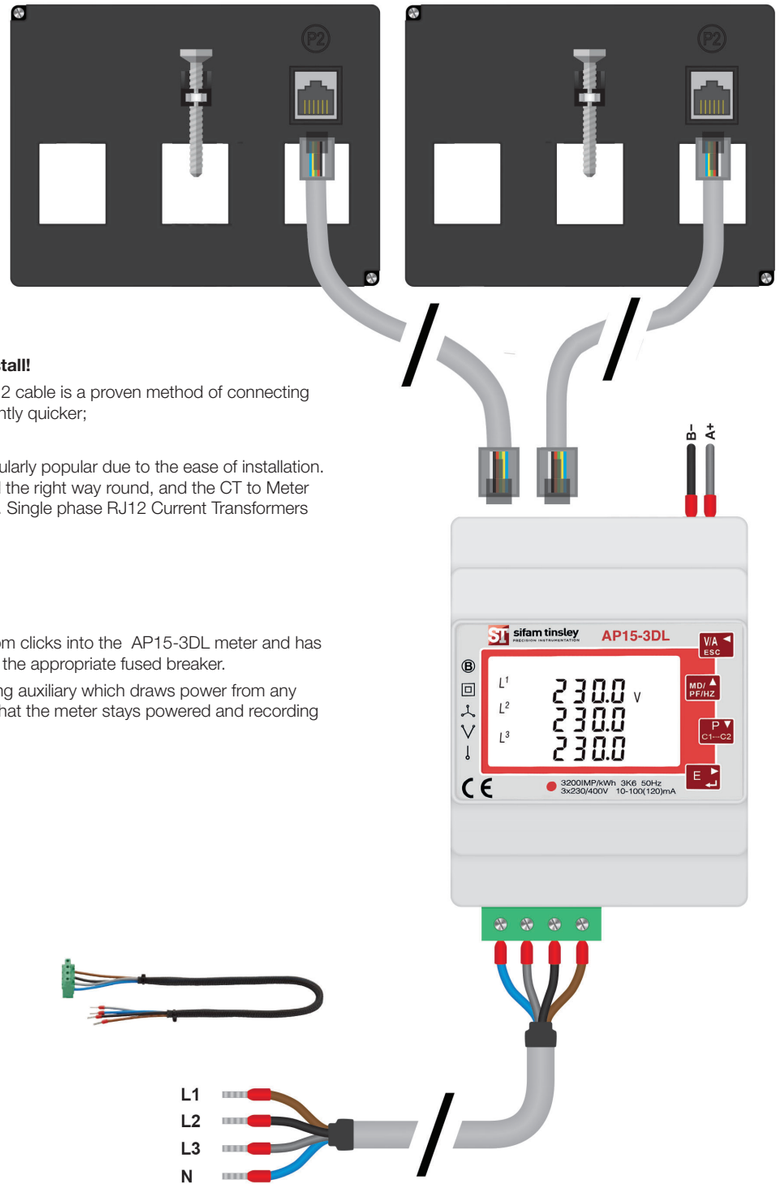

Meter to CT RJ12 Cable

Pre-wired looms ensure an error-free install!

Instead of using traditional terminals, the RJ12 cable is a proven method of connecting the meter to the current transformer significantly quicker;

eridicating human error.

Three-in-one Current Transformers are particularly popular due to the ease of installation. The CT is clearly labelled so that it is installed the right way round, and the CT to Meter RJ12 cable ensures an error-free connection. Single phase RJ12 Current Transformers are also available for 1P2W installations.

Voltage to Fuse Loom

Quick and easy to connect, no auxiliary!

The pre-wired plug of the Voltage to Fuse loom clicks into the AP15-3DL meter and has open tails on the other end for connection to the appropriate fused breaker.

The AP15-3DL has an intelligent self-supplying auxiliary which draws power from any available phase connected, this guarantees that the meter stays powered and recording if one of the connected phases fails.

Fuse to Voltage loom options and ordering codes:

Part Number	Length
Q2C-VFO-0600-01	600mm
Q2C-VFO-1000-01	900mm
Q2C-VFO-1200-01	1200mm
Q2C-VFO-1500-01	1500mm

Other lengths available upon request.

Features given vary from product to product - for more detailed product specific info please visit our website www.sifamtinsley.co.uk

AP25-3 Panel Kit for DIN Rail Power Meter

Features

- Cost effective solution for Panel Mounted MID Approved Multifunction Meter
- Fits within a 92mm² cutout
- Detachable fascia to access Screw terminals from the front
- Quick Installation

AP15/AP25 Panel Adaption Kit

This Panel Kit has been engineered to work with the following models from the Sifam Tinsley range:

- AP25-3CO
- AP25-3DO

We have manufactured this as a cost effective solution for a MID approved multifunction panel-mounted meter.

This cradle has been designed for a quick & easy installation as opposed to similar products available.

Specification

The AP25-3CO Panel Kit provides a solution to a MID approved multifunction meter. This Panel Kit works in comparison with the AP15-3** or AP25-3** MID Power Meter which comes as a Dinrail mounted meter. The Panel Kit acts as a cradle which holds the Dinrail meter securely in place, the fascia of the Panel Kit creates a 96mm² fascia. The AP25-3CO Panel Kit consists of two separate components making it practical, fast and easy to install.

When installing the AP25-3CO meter using the Panel Kit, you will notice clips on either side, this is so that once the Panel Kit is pushed into the 92mm² cut out, the clips hold the cradle in place securely.

The reason for the separate front plate is so that when the meter is held securely within the cradle, the terminal screws are still accessable at the front of the meter without having to remove it from the Panel Kit. This allows for an easier wiring solution for setup and any adjustments.

Once the meter has been wired in place, the front plate can be clipped on, allowing the screen of the meter to be visible within the 96mm² square panel enclosure. Due to the AP25-3CO meter featuring touchscreen buttons, the user can cycle through all parameter options whilst the meter is secured within the Panel Kit.

Dimensions

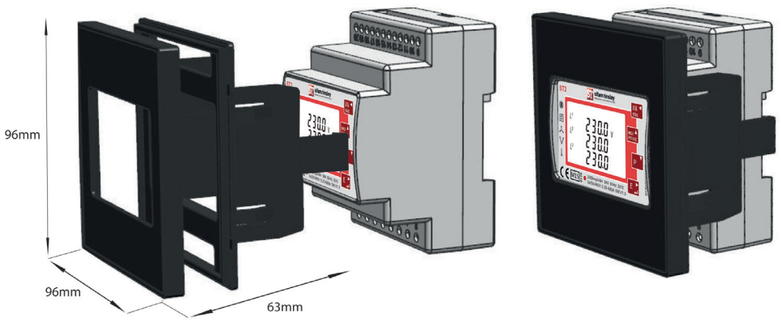

Panel Kit: Height: 96mm, Length: 96mm, Depth: 63mm
Face Hole: Height: 41mm, Length: 71mm

AP35-3RJ12

96mm² PANEL MOUNTED DIGITAL MULTIFUNCTION METER (MID CERTIFIED)

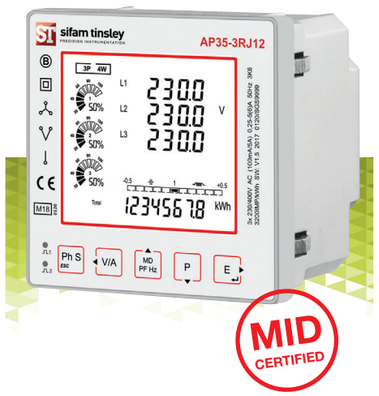

AP35-3RJ12

Features

- MID B+D Certified
- Class 0.5 Accuracy
- Single & Three Phase
- Import / Export kWh
- Phase Summary Screen
- RJ12 Current Transformer connection
- Error Free "Plug in" installation
- Intelligent self-supplying auxiliary
- Total harmonic distortion (THD) and individual, up to the 63rd harmonic

3. Dimensions

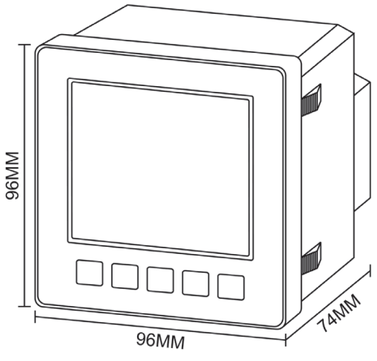

Features given vary from product to product - for more detailed product specific info please visit our website www.sifamtinsley.co.uk

Sifam Tinsleys AP35-3RJ12 is a new generation modern design power monitor that will measure and display electrical power quality parameters. It has been engineered to cover most applications (Single Phase and Three Phase networks / Built in Pulsed and RS485 Modbus / Import and Export kWh), replacing the need for several different models of this power meter.

For ease of installation, this meter features RJ12 connectors. This is the quickest, most efficient way of connecting the meter to the current transformer. As the demand for MID certified meters has increased, we have obtained annex B and D of the EC Directive 2004/22/EC. This power meter has been tested and certified for single or three phase networks and import and export active energy (kWh).

1. Parameters

- Phase to Phase Voltage
- Phase Current (A)
- Current Total Harmonic Distortion (I%THD)
- Power Factor (PF)
- Power Max Demand (MD kW)
- Reactive Power (kVAr)
- Import Active Energy (kWh)
- Total Active Energy (kWh)
- Export Reactive Energy (kVArh)
- Phase to Phase Voltage (V)
- Voltage Total Harmonic Distortion (U%THD)
- Frequency (Hz)
- Current Max Demand (MD A)
- Active Power (kW)
- Apparent Power (kVA)
- Export Active Energy (kWh)
- Import Reactive Energy (kVArh)
- Total Reactive Energy (kVArh)

2. Specifications

Measured Parameters

The unit can monitor and display the following parameters of a Single Phase Two Wire (1P2W), Three Phase Three Wire (3P3W) or Three Phase Four Wire (3P4W) system.

Voltage and Current

- Phase to Neutral Voltages 100 to 276V AC (not for 3P3W supplies).
- Phase to Phase Voltages 174 to 480V AC (3 Phase supplies only).
- Percentage total Voltage Harmonic Distortion (U THD%) for each Phase to N (not for 3P3W supplies).
- Percentage Voltage THD% between Phases (3 Phase supplies only).
- Percentage total Current Harmonic Distortion (I THD%) for each Phase.

Power factor and Frequency and Max. Demand

- Frequency in Hz (45~66Hz)
- Instantaneous power:
- Power 0 to 999MW
- Reactive power 0 to 999MVAr
- Volt-amps 0 to 999MVA
- Maximum demanded power since last Demand reset Power factor
- Maximum neutral demand current, since the last Demand reset (for 3 Phase supplies only)

Energy Measurements

Imported/Exported active energy	0 to 9999999.9 kWh
Imported/Exported reactive energy	0 to 9999999.9 kVArh
Total active energy	0 to 9999999.9 kWh
Total reactive energy	0 to 9999999.9 kVArh

Measured Inputs

Voltage inputs through 4-way fixed connector with 2.5mm² stranded wire capacity. Single Phase Two Wire (1P2W), Three Phase Three Wire (3P3W) or Three Phase Four Wire (3P4W) unbalanced. Line frequency measured from L1 Voltage or L3 Voltage. Three Current inputs for connection of external CTs with RJ12 cable. Nominal rated input Current 100mA AC RMS.

Nominal Voltage Input	100-276V AC (Ph+N) or 174-480V AC (Ph+Ph)
Max Continuous Voltage	120% of Nominal
Nominal Input Current	100mA AC RMS
Max Continuous Current	120% of Nominal
Frequency	50Hz ±10%

Accuracy

Voltage	0·5% of range maximum
Current	0·5% of nominal
Frequency	0·2% of mid-frequency
Power Factor	1% of unity (0.01)
Active Power (W)	±1% of range maximum
Reactive Power (VAr)	±1% of range maximum
Apparent Power (VA)	±1% of range maximum
Active Energy (Wh)	Class 0.5 IEC 62053-22
ReactiveEnergy (VARh)	Class 2 IEC 62053-23
Total Harmonic Distortion	1% up to 63rd harmonic

Auxiliary Supply

This unit does not require a separate auxiliary supply; the unit draws the necessary power from the voltage input connections. If a three phase supply is connected, and the phase that is powering the unit fails, it will change the phase supply to avoid shutting down.

Interfaces for External Monitoring

Three interfaces are provided:

- RS485 communication channel that can be programmed for Modbus RTU protocol
- Relay output indicating real-time measured energy.(configurable)
- Pulse output 3200imp/kWh (not configurable)

The Modbus configuration (baud rate etc.) and the pulse relay output assignments (kW/kVArh, import/export etc.) are configured through the set-up screens.

Pulse Output

The pulsed outputs are "passive type" and comply with Class A IEC 62053-31. The pulse output can be set to generate pulses to represent kWh or kVArh.

The Pulse Rate can be set as follows:

0.001	= 1 pulse per 1 Wh/VArh (1000 pulses per kWh/kVArh)
0.01	= 1 pulse per 10 Wh/VArh (100 pulses per kWh/kVArh)
0.1	= 1 pulse per 100 Wh/VArh (10 pulses per kWh/kVArh)
1	= 1 pulse per 1 kWh/kVArh
10	= 1 pulse per 10 kWh/kVArh
100	= 1 pulse per 100 kWh/kVArh
1000	= 1 pulse per 1000 kWh/kVArh

The Pulse width can we set as 200/100/60 mS.

RS485 Output for Modbus RTU

For Modbus RTU, the following RS485 communication parameters can be configured from the setup menu:

Baud rate 2400, 4800, 9600, 19200, 38400

Parity none (default) / even / odd

Stop bits 1 or 2

RS485 network address three digit number, 001 to 247

Response Time <100mS

Reference Conditions of Influence Quantities

Influence Quantities are variables that affect measurement errors to a minor degree. Accuracy is verified under nominal value (within the specified tolerance) of these conditions.

Ambient temperature	23°C ±1°C
Input waveform	50 or 60Hz ±2%
Input waveform	Sinusoidal (distortion factor < 0·005)
Auxiliary supply voltage	Nominal ±1%
Auxiliary supply frequency	Nominal ±1%
Auxiliary supply waveform (if AC)	Sinusoidal (distortion factor < 0·05)
Magnetic field of external origin	Terrestrial flux

Environment

Operating temperature	-25°C to +55°C*
Storage temperature	-40°C to +70°C*
Relative humidity	0 to 95%, non-condensing
Altitude	Up to 3000m
Warm up time	1 minute
Vibration	10Hz to 50Hz, IEC 60068-2-6, 2g
Shock	30g in 3 planes

*Maximum operating and storage temperatures are in the context of typical daily and seasonal variation.

Mechanics

Dimensions	96 x 96 x 74mm (WxHxD)
Mounting	DIN 96 (92mm² Cutout)
Sealing	IP51 indoor
Material	Self-extinguishing UL 94 V-0

4. Installation

Single Phase Two Wire

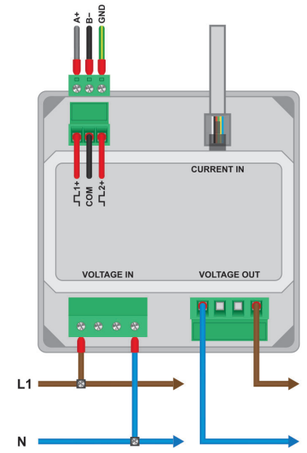

Three Phase Three Wire

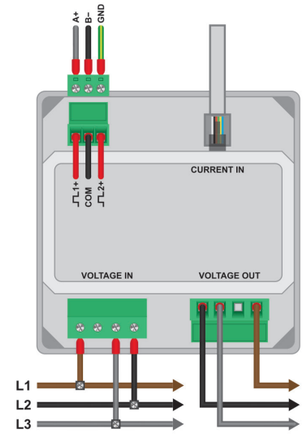

Three Phase Four Wire

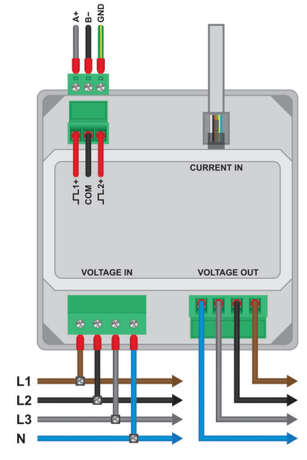

AP15-P5CO

96mm² Panel Mounted Digital 1/5A Multifunction Meter

Sifam Tinsleys AP15-P5CO is a new generation modern design power monitor that will measure and display electrical power quality parameters. It has been engineered to cover most applications (Single Phase and Three Phase networks / Built in Pulsed and RS485 Modbus / Import and Export kWh), replacing the need for several different models of this power meter.

The AP15-P5CO is produced to the highest quality and utilizes the latest microprocessor and technology. It has a backlit display and 16 different measuring parameters. This includes a negative power reading to indicate reversal of CT installation or connection. With built in pulsed outputs and RS485 Modbus RTU it is fully compatible for integration with BMS and remote monitoring systems.

AP15-P5CO

Features

- Class 0.5 Accuracy
- Single & Three Phase
- Import / Export kWh
- Phase Summary Screen
- Self-supplying auxiliary from L1 & N
- Total harmonic distortion (THD) up to the 63rd harmonic
- Touch-sensitive buttons
- Backlit display

1. Parameters

- Phase to Neutral Voltage (V)
- Phase Current (A)
- Power Factor (PF)
- Power Max Demand (MD kW)
- Reactive Power (kVAr)
- Import Active Energy (kWh)
- Total Active Energy (kWh)
- Export Reactive Energy (kVArh)
- Phase to Phase Voltage (V)
- Frequency (Hz)
- Current Max Demand (MD A)
- Active Power (kW)
- Apparent Power (kVA)
- Export Active Energy (kWh)
- Import Reactive Energy (kVArh)
- Total Reactive Energy (kVArh)

2. Specifications

Measured Parameters

The unit can monitor and display the following parameters of a Single Phase Two Wire (1P2W) or Three Phase Four Wire (3P4W) system.

Voltage and Current

- Phase to Neutral Voltages 100 to 276V AC (not for 3P3W supplies).
- Phase to Phase Voltages 174 to 480V AC (3 Phase supplies only).
- Percentage total Voltage Harmonic Distortion (U THD%) for each Phase to N.
- Percentage Voltage THD% between Phases (3 Phase supplies only).

Power factor and Frequency and Max. Demand

- Frequency in Hz (45~66Hz)
- Instantaneous power:
- Power 0 to 999MW
- Reactive power 0 to 999MVAr
- Volt-amps 0 to 999MVA
- Maximum demanded power since last Demand reset Power factor
- Maximum neutral demand current, since the last Demand reset (for 3 Phase supplies only)

Energy Measurements

Imported/Exported active energy	0 to 9999999.9 kWh
Imported/Exported reactive energy	0 to 9999999.9 kVArh
Total active energy	0 to 9999999.9 kWh
Total reactive energy	0 to 9999999.9 kVArh

Measured Inputs

Voltage inputs through 4-way fixed connector with 2.5mm² stranded wire capacity. Single Phase Two Wire (1P2W), or Three Phase Four Wire (3P4W) unbalanced. Line frequency measured from L1 Voltage or L3 Voltage. Three Current inputs (six physical terminals) with 2.5mm² stranded wire capacity for connection of external CTs. Nominal rated input Current 5A or 1A AC RMS.

Nominal Voltage Input	100-276V AC (Ph+N) or 174-480V AC (Ph+Ph)
Max Continuous Voltage	120% of Nominal
Nominal Input Current	0.25-5A(6)A AC RMS
Max Continuous Current	120% of Nominal
Nominal Input Current Burden	0.5VA
Frequency	50Hz ±10%

Accuracy

Voltage	0·5% of range maximum
Current	0·5% of nominal
Frequency	0·2% of mid-frequency
Power Factor	1% of unity (0.01)
Active Power (W)	±1% of range maximum
Reactive Power (VAr)	±1% of range maximum
Apparent Power (VA)	±1% of range maximum
Active Energy (Wh)	Class 1 IEC 62053-21 or Class 0.5 IEC 62053-22
ReactiveEnergy (VARh)	Class 2 IEC 62053-23
Total Harmonic Distortion	1% up to 63rd harmonic

3. Dimensions

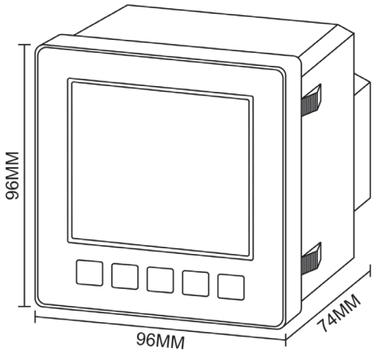

Features given vary from product to product - for more detailed product specific info please visit our website www.sifamtinsley.co.uk

Interfaces for External Monitoring

Three interfaces are provided:

- RS485 communication channel that can be programmed for Modbus RTU protocol
- Relay output indicating real-time measured energy. (configurable)
- Pulse output 3200imp/kWh (not configurable)

The Modbus configuration (baud rate etc.) and the pulse relay output assignments (kW/kVArh, import/export etc.) are configured through the set-up screens.

Pulse Output

The pulsed outputs are “passive type” and comply with Class A IEC 62053-31. The pulse output can be set to generate pulses to represent kWh or kVArh.

The Pulse Rate can be set as follows:

0.001	= 1 pulse per 1 Wh/VArh (1000 pulses per kWh/kVArh)
0.01	= 1 pulse per 10 Wh/VArh (100 pulses per kWh/kVArh)
0.1	= 1 pulse per 100 Wh/VArh (10 pulses per kWh/kVArh)
1	= 1 pulse per 1 kWh/kVArh
10	= 1 pulse per 10 kWh/kVArh
100	= 1 pulse per 100
kWh/kVArh 1000	= 1 pulse per 1000 kWh/kVArh

The Pulse width can we set as 200/100/60 mS.

RS485 Output for Modbus RTU

For Modbus RTU, the following RS485 communication parameters can be configured from the set-up menu:

Baud rate 2400, 4800, 9600, 19200, 38400
Parity none (default)
/ even / odd Stop
bits 1 or 2
RS485 network address three digit
number, 001 to 247 Response Time
<100mS

Reference Conditions of Influence Quantities

Influence Quantities are variables that affect measurement errors to a minor degree. Accuracy is verified under nominal value (within the specified tolerance) of these conditions.

Ambient temperature	23°C ±1°C
Input waveform	50 or 60Hz ±2%
Input waveform	Sinusoidal (distortion factor < 0·005)
Auxiliary supply voltage	Nominal ±1%
Auxiliary supply frequency	Nominal ±1%
Auxiliary supply waveform (if AC)	Sinusoidal (distortion factor < 0·05)
Magnetic field of external origin	Terrestrial flux

Environment

Operating temperature	-25°C to +55°C*
Storage temperature	-40°C to +70°C*
Relative humidity	0 to 95%, non-condensing
Altitude	Up to 3000m
Warm up time	1 minute
Vibration	10Hz to 50Hz, IEC 60068-2-6, 2g
Shock	30g in 3 planes

*Maximum operating and storage temperatures are in the context of typical daily and seasonal variation.

Mechanics

Dimensions	96 x 96 x 74mm (WxHxD)
Mounting	DIN 96 (92mm² Cutout)
Sealing	IP51 indoor
Material	Self-extinguishing UL 94 V-0

4. Installation

Single Phase Two Wire

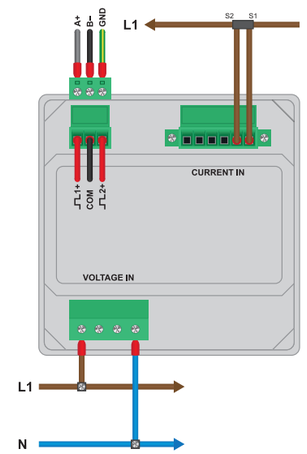

Three Phase Four Wire

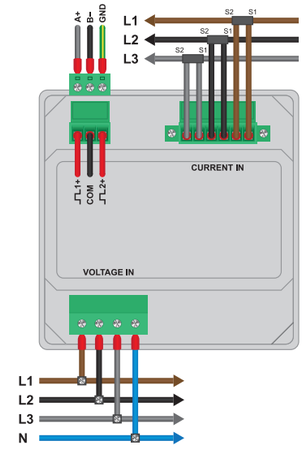

Notes

About Sifam Tinsley

An established brand name for over 75 years; Sifam Tinsley Instrumentation has an unrivaled pedigree in the industry, our dedicated research and development facility ensures that the latest technology is utilised in our electronic products whilst our traditional analogue range continues to perform through the test of time. Our UK facility completes the picture by enabling the service our customers expect.

Our Vision

To remain in harmony with our customers and continue to meet their ever changing and more demanding requirements.

Our Mission

Sifam Tinsley Instrumentation is proud to offer an unrivalled, dedicated, custom service to our customers by supplying the exact product requirement, on time, every time, from our local UK facility.

sifam tinsley
PRECISION INSTRUMENTATION

Powered by technology
...driven by service

Multifunction Meters

Transducers & Isolators

Temperature Controllers

Converters & Recorders

Digital Panel Meters

Current Transformers

Analogue Panel Meters

Shunts

Digital Multimeters

Clamp Meters

Insulation Testers

Approvals

Sifam Tinsley Instrumentation Ltd

1 Warner Drive
Springwood Industrial Estate
Braintree, Essex
CM7 2YW

Tel: 01376 335271
E-mail: sales@sifamtinsley.co.uk

www.sifamtinsley.co.uk