TRANSFORMER SERIES : Xmer & Split CT

Operating Manual

Low Voltage-Current Transformer -

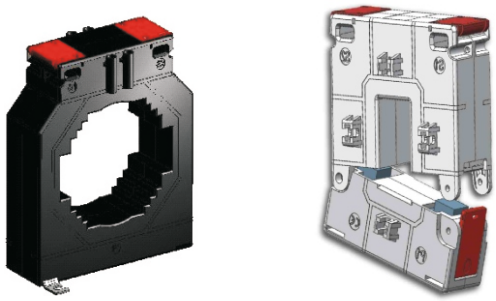

Indication

Before initial operation we ask you to pay full attention to these assembling instructions in order to guarantee the reliability and to ensure the performance of the device.

Functional description

Current transformers of the model range Omega are inductive single conductor-current transformers operating according to the transformer principle. Due to the applicated measuring principle, current transformers of this type may only be installed in alternating current (AC) networks.

Safety instructions

In order to avoid personal and material damage the following assembling steps must by performed only by authorised, qualified and trained personnel.

If the secondary circuit is operated without a burden/load (open) high voltages may appear. These voltage values are dangerous for persons as well as for the functional reliability of the current transformer.
It is forbidden to operate the current transformer without a secondary circuit (open)!

Technical parameters

Primary current:	50A to 5000A
Secondary current:	1A or 5A
Accuracy class:	0.2, 0.2s, 0.5, 0.5s & 1
Over current limiting factor:	FS5, FS10, Fs15
Rated frequency:	50Hz or 60Hz *(Whichever is specified)*
Rated continuos thermal current (standard):	1,2 x In
Rated short time thermal current Ith:	60 x In, 1 s (Max 40kA)
Rated isolation level:	0,6/3/-kV or 0,6/4/-kV *(Whichever is specified)*
Place of installation:	Indoor
Altitude:	up to 2000 m
Degree of protection:	Ip20
Degree of pollution:	2
Ambient temperature:	-25°C ≤ ϑ ≤ +40°C (0…95% relative humidity, non condensing!)
Storage temperature:	-50°C ≤ ϑ ≤ +80°C
Applied standards:	IEC - 61869 - 1 &2 : Performance IEC - 61010 - 2 : Safety.

Assembly

1. Ensure a safe work environment during assembly, maintenance and inspection operations. If necessary interrupt the current supply of the primary conductor and take precautions against unintentional switching.

2.(i) For Split core CT : Open the current transformer and fix it on the primary conductor using the fixing clamps (mounting material).
(ii) For Window type CT : Bar or cable primary insert through primary cable or bus bar & fix it using mounting screw assembly.

P1: Direction of power supply
P2: Direction of power source

Attention: (i) Do not close the current transformer, high voltages may appear on the open secondary leads.
(ii) Check for cleanness of the cut surfaces of the split core.

3. Connect the secondary wires of the current transformer with the measuring device (ampere meter, energy meter). Pay attention to the installation guide of the measuring device.

4. Now fasten the current transformer, press until the lock engage.

5. If necessary, start the current supply again.

6. Check whether the current transformer is assembled correctly and the secondary leads are connected properly.

7. For split core CT, use “lock pin” supplied along with CT to protect accidental opening of CT, during in use.

Wiring diagram

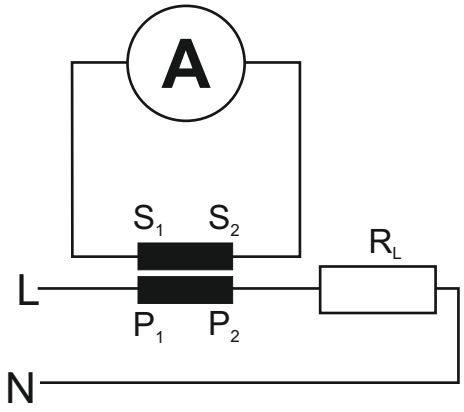

Environmental instruction

When the product has reached it´s “end of life“, it must be recycled. Pass it to an electrical waste disposal. Do not dispose as unsorted municipal waste!

This product was developed and manufactured in accordance with the applicable regulations (IEC 61010, IEC 61869) and meets the requirements of the low voltage guideline 2006/95/EG

Subject to change without notice!

Sifam Tinsley Instrumentation Ltd
1 Warner Drive, Springwood Industrial Estate, Braintree, Essex CM7 2YW
Contact No. : +44 (0) 1376 335271
Email: sales@sifamtinsley.com
www.sifamtinsley.co.uk